110948

FINAL PHASE II
FIELD OPERATIONS PLAN

VOLUME II OF II

CROYDON TCE SITE RI/FS
BUCKS COUNTY, PENNSYLVANIA

SEPTEMBER 1988

W.A. NO. 124-3LM7

AR301161

SEPTEMBER 1988

FINAL PHASE II
FIELD OPERATIONS PLAN

VOLUME II OF II

CROYDON TCE SITE RI/FS
BUCKS COUNTY, PENNSYLVANIA

EPA WORK ASSIGNMENT NUMBER 124-3LM7
UNDER
CONTRACT NUMBER 68-01-7250

PREPARED BY:
NUS CORPORATION
PITTSBURGH, PENNSYLVANIA

APPROVED BY:
EBASCO SERVICES INCORPORATED
LANGHORNE, PENNSYLVANIA

PREPARED BY:

Raymond P Wattras

RAYMOND P WATTRAS
SITE MANAGER
NUS CORPORATION

APPROVED BY:

Richard C Evans

RICHARD C EVANS, P.E.
REGIONAL MANAGER, REGION III
EBASCO SERVICES INCORPORATED

TABLE OF CONTENTS

SECTION		PAGE
APPENDICES		
A	METHOD PRECISION AND ACCURACY INFORMATION	A-1
B	COMPENDIUM OF REM III AND EPA TECHNICAL GUIDELINES	B-1
C	REM III PROGRAM FORMS	C-1
D	CONTRACT LABORATORY PROGRAM SAS REQUEST FORMS	D-1
E	REM III TEAM LABORATORY REQUEST FORMS	E-1

AR301163

APPENDICES

AR301164

A

APPENDIX A

METHOD PRECISION AND ACCURACY INFORMATION

METHOD PRECISION AND ACCURACY INFORMATION
CROYDON TCE SITE

Method	Precision	Accuracy
Soils and Sediments		
USEPA CLP Organics Analysis, TCL Volatiles	See Exhibit E, CLP Protocol	See Exhibit E, CLP Protocol
USEPA CLP Organics Analysis, TCL Base/Neutral/Acid	Same as above	Same as above
USEPA CLP Organics Analysis, TCL Pesticides/PCBs	Same as above	Same as above
USEPA CLP Inorganics Analysis, TCL Inorganics	Same as above	Same as above
Method SW9081, Cation Exchange Capacity (CEC)	NA	NA
Method ASTM D 422-63 Grain Size by Hydrometer Analysis	NA	NA
EPA Technical Report EPA/CE-81-1, pp. 3-65 to 3-76, Total Organic Carbon	NA	NA
Water		
Methods EPA 601/602, TCL Volatile Organics	See Methods 601/602, Table 2	See methods 601/602, Table 2
USEPA CLP Inorganics Analysis, TCL Inorganics	Same as above	Same as above
Method EPA 415.1, Total Organic Carbon (TOC)	±80 percent, relates to values close to detection limit. ±20 percent	1 mg/l, expressed as Bias

AR301167

B

APPENDIX B

COMPENDIUM OF REM III AND EPA TECHNICAL GUIDELINES

APPENDIX B

COMPENDIUM OF REM III AND EPA TECHNICAL GUIDELINES

- Procedures for Handling and Chemical Analysis (Eh) of Sediment and Water Samples.
- ASTM D-1586-84 Penetration Test and Split-Barrel Sampling of Soils.
- ASTM D-1587-83 Thin-Walled Tube Sampling of Soils.

FT-6.01	Soil and Rock Borings.
FT-6.02	Borehole and Sample Logging.
FT-6.03	Decontamination of Drilling Rig and Sampling Equipment.
FT-6.05	Aquifer Pump Testing.
FT-6.06	In-Situ Hydraulic Conductivity Testing.
FT-6.07	Piezometric Head Measurement and Groundwater Contour Mapping.
FT-7.01	Groundwater Monitoring Point Installation.
FT-7.02	Groundwater Sample Acquisition.
FT-7.03	Soil and Rock Sample Acquisition.
FT-7.04	Management of Sampling and Preparation of Required Forms.
FT-7.05	Sample Identification and Chain-of-Custody.
FT-7.06	Sample Preservation.
FT-7.07	Sample Packaging and Shipping.
FT-7.08	Surface Water and Sediment Sampling.
FT-7.09	Soil Sampling in Test Pits and Trenches.
FT-7.10	On-Site Water Quality Testing.
FT-12.01	Decontamination of Chemical Sampling and Field Analytical Equipment.
FT-13.01	Preparation, Approval, and Submittal of Periodic Field Reports.
FT-13.02	Forms Used in RI Activities.
FT-13.03	Site Logbook.
HS-1.02	Decontamination.
HS-1.06	Control of Contaminated Material.
HS-1.12	Incident Investigation and Reporting.

Note: Copies of the REM III Program Field Technical Guidelines are available at EPA Region III, EPA Central Regional Laboratory, and at the site command post.

AR301170

Designation: D 1586 - 84

Standard Method for PENETRATION TEST AND SPLIT-BARREL SAMPLING OF SOILS[1]

This standard is issued under the fixed designation D 1586; the number immediately following the designation indicates the year of original adoption or, in the case of revision, the year of last revision. A number in parentheses indicates the year of last reapproval. A superscript epsilon (ε) indicates an editorial change since the last revision or reapproval.

This method has been approved for use by agencies of the Department of Defense and for listing in the DOD Index of Specifications and Standards

1. Scope

1.1 This method describes the procedure, generally known as the Standard Penetration Test (SPT), for driving a split-barrel sampler to obtain a representative soil sample and a measure of the resistance of the soil to penetration of the sampler.

1.2 *This standard may involve hazardous materials, operations, and equipment. This standard does not purport to address all of the safety problems associated with its use. It is the responsibility of whoever uses this standard to consult and establish appropriate safety and health practices and determine the applicability of regulatory limitations prior to use.* For a specific precautionary statement, see 5.4.1.

1.3 The values stated in inch-pound units are to be regarded as the standard.

2. Applicable Documents

2.1 *ASTM Standards:*

D 2487 Test Method for Classification of Soils for Engineering Purposes[2]

D 2488 Practice for Description and Identification of Soils (Visual-Manual Procedure)[2]

D 4220 Practices for Preserving and Transporting Soil Samples[2]

3. Descriptions of Terms Specific to This Standard

3.1 *anvil*—that portion of the drive-weight assembly which the hammer strikes and through which the hammer energy passes into the drill rods.

3.2 *cathead*—the rotating drum or windlass in the rope-cathead lift system around which the operator wraps a rope to lift and drop the hammer by successively tightening and loosening the rope turns around the drum.

3.3 *drill rods*—rods used to transmit downward force and torque to the drill bit while drilling a borehole.

3.4 *drive-weight assembly*—a device consisting of the hammer, hammer fall guide, the anvil, and any hammer drop system.

3.5 *hammer*—that portion of the drive-weight assembly consisting of the 140 ± 2 lb (63.5 ± 1 kg) impact weight which is successively lifted and dropped to provide the energy that accomplishes the sampling and penetration.

3.6 *hammer drop system*—that portion of the drive-weight assembly by which the operator accomplishes the lifting and dropping of the hammer to produce the blow.

3.7 *hammer fall guide*—that part of the drive-weight assembly used to guide the fall of the hammer.

3.8 *N-value*—the blowcount representation of the penetration resistance of the soil. The *N*-value, reported in blows per foot, equals the sum of the number of blows required to drive the sampler over the depth interval of 6 to 18 in. (150 to 450 mm) (see 7.3).

3.9 ΔN—the number of blows obtained from each of the 6-in. (150-mm) intervals of sampler penetration (see 7.3).

3.10 *number of rope turns*—the total contact angle between the rope and the cathead at the

[1] This method is under the jurisdiction of ASTM Committee D-18 on Soil and Rock and is the direct responsibility of Subcommittee D18.02 on Sampling and Related Field Testing for Soil Investigations.

Current edition approved Sept. 11, 1984. Published November 1984. Originally published as D 1586 - 58 T. Last previous edition D 1586 - 67 (1974).

[2] *Annual Book of ASTM Standards*, Vol 04.08.

AR301171

beginning of the operator's rope slackening to drop the hammer, divided by 360° (see Fig. 1).

3.11 *sampling rods*—rods that connect the drive-weight assembly to the sampler. Drill rods are often used for this purpose.

3.12 *SPT*—abbreviation for Standard Penetration Test, a term by which engineers commonly refer to this method.

4. Significance and Use

4.1 This method provides a soil sample for identification purposes and for laboratory tests appropriate for soil obtained from a sampler that may produce large shear strain disturbance in the sample.

4.2 This method is used extensively in a great variety of geotechnical exploration projects. Many local correlations and widely published correlations which relate SPT blowcount, or *N*-value, and the engineering behavior of earthworks and foundations are available.

5. Apparatus

5.1 *Drilling Equipment*—Any drilling equipment that provides at the time of sampling a suitably clean open hole before insertion of the sampler and ensures that the penetration test is performed on undisturbed soil shall be acceptable. The following pieces of equipment have proven to be suitable for advancing a borehole in some subsurface conditions.

5.1.1 *Drag, Chopping, and Fishtail Bits*, less than 6.5 in. (162 mm) and greater than 2.2 in. (56 mm) in diameter may be used in conjuction with open-hole rotary drilling or casing-advancement drilling methods. To avoid disturbance of the underlying soil, bottom discharge bits are not permitted; only side discharge bits are permitted.

5.1.2 *Roller-Cone Bits*, less than 6.5 in. (162 mm) and greater than 2.2 in. (56 mm) in diameter may be used in conjunction with open-hole rotary drilling or casing-advancement drilling methods if the drilling fluid discharge is deflected.

5.1.3 *Hollow-Stem Continuous Flight Augers*, with or without a center bit assembly, may be used to drill the boring. The inside diameter of the hollow-stem augers shall be less than 6.5 in. (162 mm) and greater than 2.2 in. (56 mm).

5.1.4 *Solid, Continuous Flight, Bucket and Hand Augers*, less than 6.5 in. (162 mm) and greater than 2.2 in. (56 mm) in diameter may be used if the soil on the side of the boring does not cave onto the sampler or sampling rods during sampling.

5.2 *Sampling Rods*—Flush-joint steel drill rods shall be used to connect the split-barrel sampler to the drive-weight assembly. The sampling rod shall have a stiffness (moment of inertia) equal to or greater than that of parallel wall "A" rod (a steel rod which has an outside diameter of 1⅝ in. (41.2 mm) and an inside diameter of 1⅛ in. (28.5 mm).

NOTE 1—Recent research and comparative testing indicates the type rod used, with stiffness ranging from "A" size rod to "N" size rod, will usually have a negligible effect on the *N*-values to depths of at least 100 ft (30 m).

5.3 *Split-Barrel Sampler*—The sampler shall be constructed with the dimensions indicated in Fig. 2. The driving shoe shall be of hardened steel and shall be replaced or repaired when it becomes dented or distorted. The use of liners to produce a constant inside diameter of 1⅜ in. (35 mm) is permitted, but shall be noted on the penetration record if used. The use of a sample retainer basket is permitted, and should also be noted on the penetration record if used.

NOTE 2—Both theory and available test data suggest that *N*-values may increase between 10 to 30 % when liners are used.

5.4 *Drive-Weight Assembly*:

5.4.1 *Hammer and Anvil*—The hammer shall weigh 140 ± 2 lb (63.5 ± 1 kg) and shall be a solid rigid metallic mass. The hammer shall strike the anvil and make steel on steel contact when it is dropped. A hammer fall guide permitting a free fall shall be used. Hammers used with the cathead and rope method shall have an unimpeded overlift capacity of at least 4 in. (100 mm). For safety reasons, the use of a hammer assembly with an internal anvil is encouraged.

NOTE 3—It is suggested that the hammer fall guide be permanently marked to enable the operator or inspector to judge the hammer drop height.

5.4.2 *Hammer Drop System*—Rope-cathead, trip, semi-automatic, or automatic hammer drop systems may be used, providing the lifting apparatus will not cause penetration of the sampler while re-engaging and lifting the hammer.

5.5 *Accessory Equipment*—Accessories such as labels, sample containers, data sheets, and groundwater level measuring devices shall be provided in accordance with the requirements of the project and other ASTM standards.

AR301172

6. Drilling Procedure

6.1 The boring shall be advanced incrementally to permit intermittent or continuous sampling. Test intervals and locations are normally stipulated by the project engineer or geologist. Typically, the intervals selected are 5 ft (1.5 mm) or less in homogeneous strata with test and sampling locations at every change of strata.

6.2 Any drilling procedure that provides a suitably clean and stable hole before insertion of the sampler and assures that the penetration test is performed on essentially undisturbed soil shall be acceptable. Each of the following procedures have proven to be acceptable for some subsurface conditions. The subsurface conditions anticipated should be considered when selecting the drilling method to be used.

6.2.1 Open-hole rotary drilling method.

6.2.2 Continuous flight hollow-stem auger method.

6.2.3 Wash boring method.

6.2.4 Continuous flight solid auger method.

6.3 Several drilling methods produce unacceptable borings. The process of jetting through an open tube sampler and then sampling when the desired depth is reached shall not be permitted. The continuous flight solid auger method shall not be used for advancing the boring below a water table or below the upper confining bed of a confined non-cohesive stratum that is under artesian pressure. Casing may not be advanced below the sampling elevation prior to sampling. Advancing a boring with bottom discharge bits is not permissible. It is not permissible to advance the boring for subsequent insertion of the sampler solely by means of previous sampling with the SPT sampler.

6.4 The drilling fluid level within the boring or hollow-stem augers shall be maintained at or above the in situ groundwater level at all times during drilling, removal of drill rods, and sampling.

7. Sampling and Testing Procedure

7.1 After the boring has been advanced to the desired sampling elevation and excessive cuttings have been removed, prepare for the test with the following sequence of operations.

7.1.1 Attach the split-barrel sampler to the sampling rods and lower into the borehole. Do not allow the sampler to drop onto the soil to be sampled.

7.1.2 Position the hammer above and attach the anvil to the top of the sampling rods. This may be done before the sampling rods and sampler are lowered into the borehole.

7.1.3 Rest the dead weight of the sampler, rods, anvil, and drive weight on the bottom of the boring and apply a seating blow. If excessive cuttings are encountered at the bottom of the boring, remove the sampler and sampling rods from the boring and remove the cuttings.

7.1.4 Mark the drill rods in three successive 6-in. (0.15-m) increments so that the advance of the sampler under the impact of the hammer can be easily observed for each 6-in. (0.15-m) increment.

7.2 Drive the sampler with blows from the 140-lb (63.5-kg) hammer and count the number of blows applied in each 6-in. (0.15-m) increment until one of the following occurs:

7.2.1 A total of 50 blows have been applied during any one of the three 6-in. (0.15-m) increments described in 7.1.4.

7.2.2 A total of 100 blows have been applied.

7.2.3 There is no observed advance of the sampler during the application of 10 successive blows of the hammer.

7.2.4 The sampler is advanced the complete 18 in. (0.45 m) without the limiting blow counts occurring as described in 7.2.1, 7.2.2, or 7.2.3.

7.3 Record the number of blows required to effect each 6 in. (0.15 m) of penetration or fraction thereof. The first 6 in. is considered to be a seating drive. The sum of the number of blows required for the second and third 6 in. of penetration is termed the "standard penetration resistance", or the "N-value". If the sampler is driven less than 18 in. (0.45 m), as permitted in 7.2.1, 7.2.2, or 7.2.3, the number of blows per each complete 6-in. (0.15-m) increment and per each partial increment shall be recorded on the boring log. For partial increments, the depth of penetration shall be reported to the nearest 1 in. (25 mm), in addition to the number of blows. If the sampler advances below the bottom of the boring under the static weight of the drill rods or the weight of the drill rods plus the static weight of the hammer, this information should be noted on the boring log.

7.4 The raising and dropping of the 140-lb

AR301173

(63.5-kg) hammer shall be accomplished using either of the following two methods:

7.4.1 By using a trip, automatic, or semi-automatic hammer drop system which lifts the 140-lb (63.5-kg) hammer and allows it to drop 30 ± 1.0 in. (0.76 m ± 25 mm) unimpeded.

7.4.2 By using a cathead to pull a rope attached to the hammer. When the cathead and rope method is used the system and operation shall conform to the following:

7.4.2.1 The cathead shall be essentially free of rust, oil, or grease and have a diameter in the range of 6 to 10 in. (150 to 250 mm).

7.4.2.2 The cathead should be operated at a minimum speed of rotation of 100 RPM, or the approximate speed of rotation shall be reported on the boring log.

7.4.2.3 No more than 2¼ rope turns on the cathead may be used during the performance of the penetration test, as shown in Fig. 1.

NOTE 4—The operator should generally use either 1¾ or 2¼ rope turns, depending upon whether or not the rope comes off the top (1¾ turns) or the bottom (2¼ turns) of the cathead. It is generally known and accepted that 2¾ or more rope turns considerably impedes the fall of the hammer and should not be used to perform the test. The cathead rope should be maintained in a relatively dry, clean, and unfrayed condition.

7.4.2.4 For each hammer blow, a 30-in. (0.76-m) lift and drop shall be employed by the operator. The operation of pulling and throwing the rope shall be performed rhythmically without holding the rope at the top of the stroke.

7.5 Bring the sampler to the surface and open. Record the percent recovery or the length of sample recovered. Describe the soil samples recovered as to composition, color, stratification, and condition, then place one or more representative portions of the sample into sealable moisture-proof containers (jars) without ramming or distorting any apparent stratification. Seal each container to prevent evaporation of soil moisture. Affix labels to the containers bearing job designation, boring number, sample depth, and the blow count per 6-in. (0.15-m) increment. Protect the samples against extreme temperature changes. If there is a soil change within the sampler, make a jar for each stratum and note its location in the sampler barrel.

8. Report

8.1 Drilling information shall be recorded in the field and shall include the following:

8.1.1 Name and location of job.

8.1.2 Names of crew.

8.1.3 Type and make of drilling machine.

8.1.4 Weather conditions.

8.1.5 Date and time of start and finish of boring.

8.1.6 Boring number and location (station and coordinates, if available and applicable).

8.1.7 Surface elevation, if available.

8.1.8 Method of advancing and cleaning the boring.

8.1.9 Method of keeping boring open.

8.1.10 Depth of water surface and drilling depth at the time of a noted loss of drilling fluid, and time and date when reading or notation was made.

8.1.11 Location of strata changes.

8.1.12 Size of casing, depth of cased portion of boring.

8.1.13 Equipment and method of driving sampler.

8.1.14 Type sampler and length and inside diameter of barrel (note use of liners).

8.1.15 Size, type, and section length of the sampling rods, and

8.1.16 Remarks.

8.2 Data obtained for each sample shall be recorded in the field and shall include the following:

8.2.1 Sample depth and, if utilized, the sample number.

8.2.2 Description of soil.

8.2.3 Strata changes within sample.

8.2.4 Sampler penetration and recovery lengths, and

8.2.5 Number of blows per 6-in. (0.15-m) or partial increment.

9. Precision and Bias

9.1 Variations in N-values of 100 % or more have been observed when using different standard penetration test apparatus and drillers for adjacent borings in the same soil formation. Current opinion, based on field experience, indicates that when using the same apparatus and driller, N-values in the same soil can be reproduced with a coefficient of variation of about 10 %.

9.2 The use of faulty equipment, such as an extremely massive or damaged anvil, a rusty cathead, a low speed cathead, an old, oily rope, or massive or poorly lubricated rope sheaves can significantly contribute to differences in N-values

AR301174

380

obtained between operator-drill rig systems.

9.3 The variability in N-values produced by different drill rigs and operators may be reduced by measuring that part of the hammer energy delivered into the drill rods from the sampler and adjusting N on the basis of comparative energies. A method for energy measurement and N-value adjustment is currently under development.

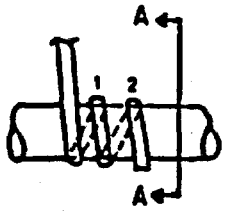

(a) counterclockwise rotation approximately 1½ turns

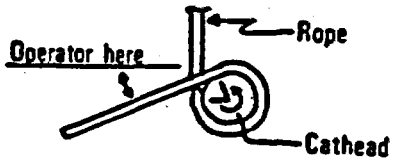

Section A–A

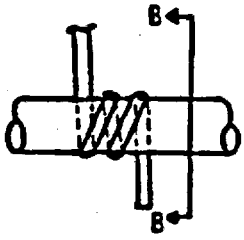

(b) clockwise rotation approximately 2½ turns

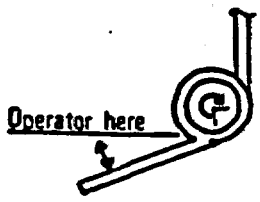

Section B–B

FIG. 1 Definitions of the Number of Rope Turns and the Angle for (a) Counterclockwise Rotation and (b) Clockwise Rotation of the Cathead

AR301175

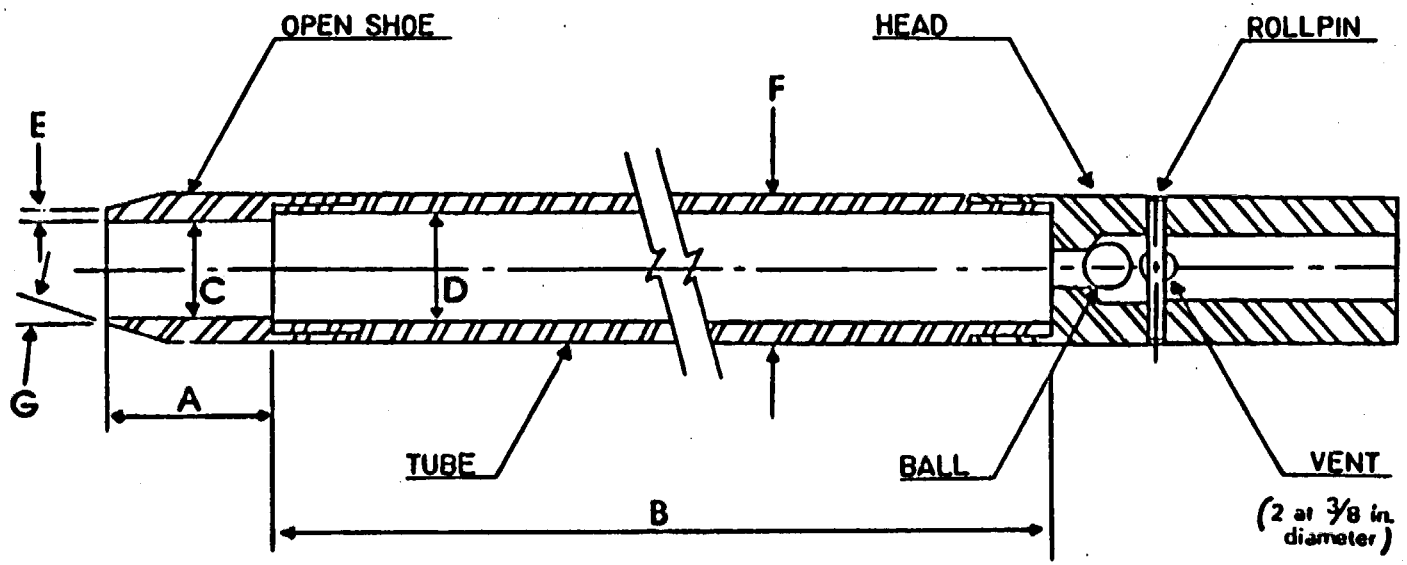

A = 1.0 to 2.0 in. (25 to 50 mm)
B = 18.0 to 30.0 in. (0.457 to 0.762 m)
C = 1.375 ± 0.005 in. (34.93 ± 0.13 mm)
D = 1.50 ± 0.005 − 0.000 in. (38.1 ± 1.3 − 0.0 mm)
E = 0.10 ± 0.002 in. (2.54 ± 0.25 mm)
F = 2.00 ± 0.005 − 0.000 in. (50.8 ± 1.3 − 0.0 mm)
G = 16.0° to 23.0°

The 1½ in. (38 mm) inside diameter split barrel may be used with a 16-gage wall thickness split liner. The penetrating end of the drive shoe may be slightly rounded. Metal or plastic retainers may be used to retain soil samples.

FIG. 2 Split-Barrel Sampler

The American Society for Testing and Materials takes no position respecting the validity of any patent rights asserted in connection with any item mentioned in this standard. Users of this standard are expressly advised that determination of the validity of any such patent rights, and the risk of infringement of such rights, are entirely their own responsibility.

This standard is subject to revision at any time by the responsible technical committee and must be reviewed every five years and if not revised, either reapproved or withdrawn. Your comments are invited either for revision of this standard or for additional standards and should be addressed to ASTM Headquarters. Your comments will receive careful consideration at a meeting of the responsible technical committee, which you may attend. If you feel that your comments have not received a fair hearing you should make your views known to the ASTM Committee on Standards, 1916 Race St., Philadelphia, Pa. 19103.

AR301176

Designation: D 1587 - 83

Standard Practice for THIN-WALLED TUBE SAMPLING OF SOILS[1]

This standard is issued under the fixed designation D 1587; the number immediately following the designation indicates the year of original adoption or, in the case of revision, the year of last revision. A number in parentheses indicates the year of last reapproval. A superscript epsilon (ε) indicates an editorial change since the last revision or reapproval.

This practice has been approved for use by agencies of the Department of Defense and for listing in the DOD Index of Specifications and Standards.

1. Scope

1.1 This practice covers a procedure for using a thin-walled metal tube to recover relatively undisturbed soil samples suitable for laboratory tests of structural properties. Thin-walled tubes used in piston, plug, or rotary-type samplers, such as the Denison or Pitcher, must comply with the portions of this practice which describe the thin-walled tubes (5.3).

NOTE 1—This practice does not apply to liners used within the above samplers.

2. Applicable Documents

2.1 *ASTM Standards:*

D 2488 Practice for Description and Identification of Soils (Visual-Manual Procedure)[2]

D 3550 Practice for Ring-Lined Barrel Sampling of Soils[2]

D 4220 Practices for Preserving and Transporting Soil Samples[2]

3. Summary of Practice

3.1 A relatively undisturbed sample is obtained by pressing a thin-walled metal tube into the in-situ soil, removing the soil-filled tube, and sealing the ends to prevent the soil from being disturbed or losing moisture.

4. Significance and Use

4.1 This practice, or Practice D 3550, is used when it is necessary to obtain a relatively undisturbed specimen suitable for laboratory tests of structural properties or other tests that might be influenced by soil disturbance.

5. Apparatus

5.1 *Drilling Equipment*—Any drilling equipment may be used that provides a reasonably clean hole; that does not disturb the soil to be sampled; and that does not hinder the penetration of the thin-walled sampler. Open borehole diameter and the inside diameter of driven casing or hollow stem auger shall not exceed 3.5 times the outside diameter of the thin-walled tube.

5.2 *Sampler Insertion Equipment*, shall be adequate to provide a relatively rapid continuous penetration force. For hard formations it may be necessary, although not recommended, to drive the thin-walled tube sampler.

5.3 *Thin-Walled Tubes*, should be manufactured as shown in Fig. 1. They should have an outside diameter of 2 to 5 in. and be made of metal having adequate strength for use in the soil and formation intended. Tubes shall be clean and free of all surface irregularities including projecting weld seams.

5.3.1 *Length of Tubes*—See Table 1 and 6.4.

5.3.2 *Tolerances*, shall be within the limits shown in Table 2.

5.3.3 *Inside Clearance Ratio*, should be 1 % or as specified by the engineer or geologist for the soil and formation to be sampled. Generally, the inside clearance ratio used should increase with the increase in plasticity of the soil being sampled. See Fig. 1 for definition of inside clearance ratio.

5.3.4 *Corrosion Protection*—Corrosion, whether from galvanic or chemical reaction, can damage or destroy both the thin-walled tube and the sample. Severity of damage is a function of

[1] This practice is under the jurisdiction of ASTM Committee D-18 on Soil and Rock and is the direct responsibility of Subcommittee D18.02 on Sampling and Related Field Testing for Soil Investigations.

Current edition approved Aug. 17, 1983. Published October 1983. Originally published as D 1587 - 58 T. Last previous edition D 1587 - 74

[2] *Annual Book of ASTM Standards*, Vol 04.08.

AR301177

time as well as interaction between the sample and the tube. Thin-walled tubes should have some form of protective coating. Tubes which will contain samples for more than 72 h shall be coated. The type of coating to be used may vary depending upon the material to be sampled. Coatings may include a light coat of lubricating oil, lacquer, epoxy, Teflon, and others. Type of coating must be specified by the engineer or geologist if storage will exceed 72 h. Plating of the tubes or alternate base metals may be specified by the engineer or geologist.

5.4 *Sampler Head*, serves to couple the thin-walled tube to the insertion equipment and, together with the thin-walled tube, comprises the thin-walled tube sampler. The sampler head shall contain a suitable check valve and a venting area to the outside equal to or greater than the area through the check valve. Attachment of the head to the tube shall be concentric and coaxial to assure uniform application of force to the tube by the sampler insertion equipment.

6. Procedure

6.1 Clean out the borehole to sampling elevation using whatever method is preferred that will ensure the material to be sampled is not disturbed. If groundwater is encountered, maintain the liquid level in the borehole at or above ground water level during the sampling operation.

6.2 Bottom discharge bits are not permitted. Side discharge bits may be used, with caution. Jetting through an open-tube sampler to clean out the borehole to sampling elevation is not permitted. Remove loose material from the center of a casing or hollow stem auger as carefully as possible to avoid disturbance of the material to be sampled.

NOTE 2—Roller bits are available in downward-jetting and diffused-jet configurations. Downward-jetting configuration rock bits are not acceptable. Diffuse-jet configurations are generally acceptable.

6.3 Place the sample tube so that its bottom rests on the bottom of the hole. Advance the sampler without rotation by a continuous relatively rapid motion.

6.4 Determine the length of advance by the resistance and condition of the formation, but the length shall never exceed 5 to 10 diameters of the tube in sands and 10 to 15 diameters of the tube in clays.

NOTE 3—Weight of sample, laboratory handling capabilities, transportation problems, and commercial availability of tubes will generally limit maximum practical lengths to those shown in Table 1.

6.5 When the formation is too hard for push-type insertion, the tube may be driven or Practice D 3550 may be used. Other methods, as directed by the engineer or geologist, may be used. If driving methods are used, the data regarding weight and fall of the hammer and penetration achieved must be shown in the report. Additionally, that tube must be prominently labeled a "driven sample."

6.6 In no case shall a length of advance be greater than the sample-tube length minus an allowance for the sampler head and a minimum of 3 in. for sludge-end cuttings.

NOTE 4—The tube may be rotated to shear bottom of the sample after pressing is complete.

6.7 Withdraw the sampler from the formation as carefully as possible in order to minimize disturbance of the sample.

7. Preparation for Shipment

7.1 Upon removal of the tube, measure the length of sample in the tube. Remove the disturbed material in the upper end of the tube and measure the length again. Seal the upper end of the tube. Remove at least 1 in. of material from the lower end of the tube. Use this material for soil description in accordance with Practice D 2488. Measure the overall sample length. Seal the lower end of the tube. Alternatively, after measurement, the tube may be sealed without removal of soil from the ends of the tube if so directed by the engineer or geologist.

NOTE 5—Field extrusion and packaging of extruded samples under the specific direction of a geotechnical engineer or geologist is permitted.

NOTE 6—Tubes sealed over the ends as opposed to those sealed with expanding packers should contain end padding in end voids in order to prevent drainage or movement of the sample within the tube.

7.2 Prepare and immediately affix labels or apply markings as necessary to identify the sample. Assure that the markings or labels are adequate to survive transportation and storage.

8. Report

8.1 The appropriate information is required as follows:

8.1.1 Name and location of the project.

8.1.2 Boring number and precise location on project.

AR301178

8.1.3 Surface elevation or reference to a datum.

8.1.4 Date and time of boring—start and finish.

8.1.5 Depth to top of sample and number of sample.

8.1.6 Description of sampler: size, type of metal, type of coating.

8.1.7 Method of sampler insertion: push or drive.

8.1.8 Method of drilling, size of hole, casing, and drilling fluid used.

8.1.9 Depth to groundwater level: date and time measured.

8.1.10 Any possible current or tidal effect on water level.

8.1.11 Soil description in accordance with Practice D 2488.

8.1.12 Length of sampler advance, and

8.1.13 Recovery: length of sample obtained.

9. Precision and Bias

9.1 This practice does not produce numerical data; therefore, a precision and bias statement is not applicable.

TABLE 1 Suitable Thin-Walled Steel Sample Tubes[A]

Outside diameter:			
in.	2	3	5
mm	50.8	76.2	127
Wall thickness:			
Bwg	18	16	11
in.	0.049	0.065	0.120
mm	1.24	1.65	3.05
Tube length:			
in.	36	36	54
m	0.91	0.91	1.45
Clearance ratio, %	1	1	1

[A] The three diameters recommended in Table 1 are indicated for purposes of standardization, and are not intended to indicate that sampling tubes of intermediate or larger diameters are not acceptable. Lengths of tubes shown are illustrative. Proper lengths to be determined as suited to field conditions.

TABLE 2 Dimensional Tolerances for Thin-Walled Tubes

Nominal Tube Diameters from Table 1[A] Tolerances, in.			
Size Outside Diameter	2	3	5
Outside diameter	+0.007 −0.000	+0.010 −0.000	+0.015 −0.000
Inside diameter	+0.000 −0.007	+0.000 −0.010	+0.000 −0.015
Wall thickness	±0.007	±0.010	±0.015
Ovality	0.015	0.020	0.030
Straightness	0.030/ft	0.030/ft	0.030/ft

[A] Intermediate or larger diameters should be proportional. Tolerances shown are essentially standard commercial manufacturing tolerances for seamless steel mechanical tubing. Specify only two of the first three tolerances: that is, O.D. and I.D., or O.D. and Wall, or I.D. and Wall.

AR301179

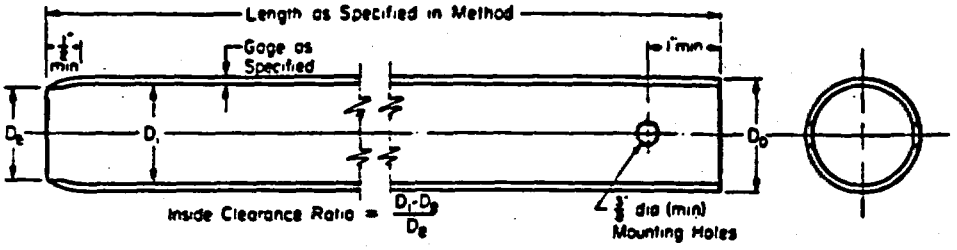

NOTE 1—Minimum of two mounting holes on opposite sides for 2 to 3½ in. sampler.
NOTE 2—Minimum of four mounting holes spaced at 90° for samplers 4 in. and larger.
NOTE 3—Tube held with hardened screws.
NOTE 4—Two-inch outside-diameter tubes are specified with an 18-gage wall thickness to comply with area ratio criteria accepted for "undisturbed samples." Users are advised that such tubing is difficult to locate and can be extremely expensive in small quantities. Sixteen-gage tubes are generally readily available.

Metric Equivalents

in.	mm
¼	6.77
½	12.7
1	25.4
2	50.8
3½	88.9
4	101.6

FIG. 1 Thin-Walled Tube for Sampling

The American Society for Testing and Materials takes no position respecting the validity of any patent rights asserted in connection with any item mentioned in this standard. Users of this standard are expressly advised that determination of the validity of any such patent rights, and the risk of infringement of such rights, are entirely their own responsibility.

This standard is subject to revision at any time by the responsible technical committee and must be reviewed every five years and if not revised, either reapproved or withdrawn. Your comments are invited either for revision of this standard or for additional standards, and should be addressed to ASTM Headquarters. Your comments will receive careful consideration at a meeting of the responsible technical committee, which you may attend. If you feel that your comments have not received a fair hearing you should make your views known to the ASTM Committee on Standards, 1916 Race St., Philadelphia, Pa. 19103.

AR301180

C

AR301181

APPENDIX C

REM III PROGRAM FORMS

APPENDIX C

REM III PROGRAM FORMS

Guidelines	FT Guideline Attachment Number	Title of Form
FT-7.05	Attachment C-3	Chain-of-Custody Record Region III
FT-13.02	Attachment B-20	Analytical Services Packing List
FT-13.02	Attachment B-16	Organics Traffic Report
FT-13.02	Attachment B-17	Inorganic Traffic Report
FT-7.05	Attachment A	Sample Label
FT-7.05	Attachment B	Sample Identification Tag
*Substituted for FT-7.02 and FT-7.02	Attachment A Attachment C	Sample Log Sheet (Groundwater) Sample Log Sheet (Soil/Sediment) Sample Log Sheet (Surface Water)
FT-13.01	Attachment C	Weekly Field Summary Report
QA Project Plan	Section 15	Field Change Request Form
FT-13.01	Attachment D-1	Equipment Calibration Log
FT-7.04	Attachment J	Project Sample Summary
FT-6.05	Attachment B	Data sheet for pumping test (observation well) or in-situ Hydraulic Conductivity Test
FT-6.05	Attachment A	Data Sheet for Pumping Test
FT-6.07	Attachment A	Groundwater Level Measurement
*Substitute FT-6.02	Attachment A	Boring Log
*Substitute FT-13.01	Attachment B-1	Daily Record - Subsurface Investigation
*Substitute FT-7.01	Attachment D	Bedrock Monitoring Well Sheet
*Substitute FT-7.01	Attachment C	Overburden Monitoring Well Sheet
FT-7.05	Attachment E	Receipt for Samples
		EPA Sample Shipping Log for all Samples sent through CLP

*NUS forms are being substituted for these guidelines.

AR301183

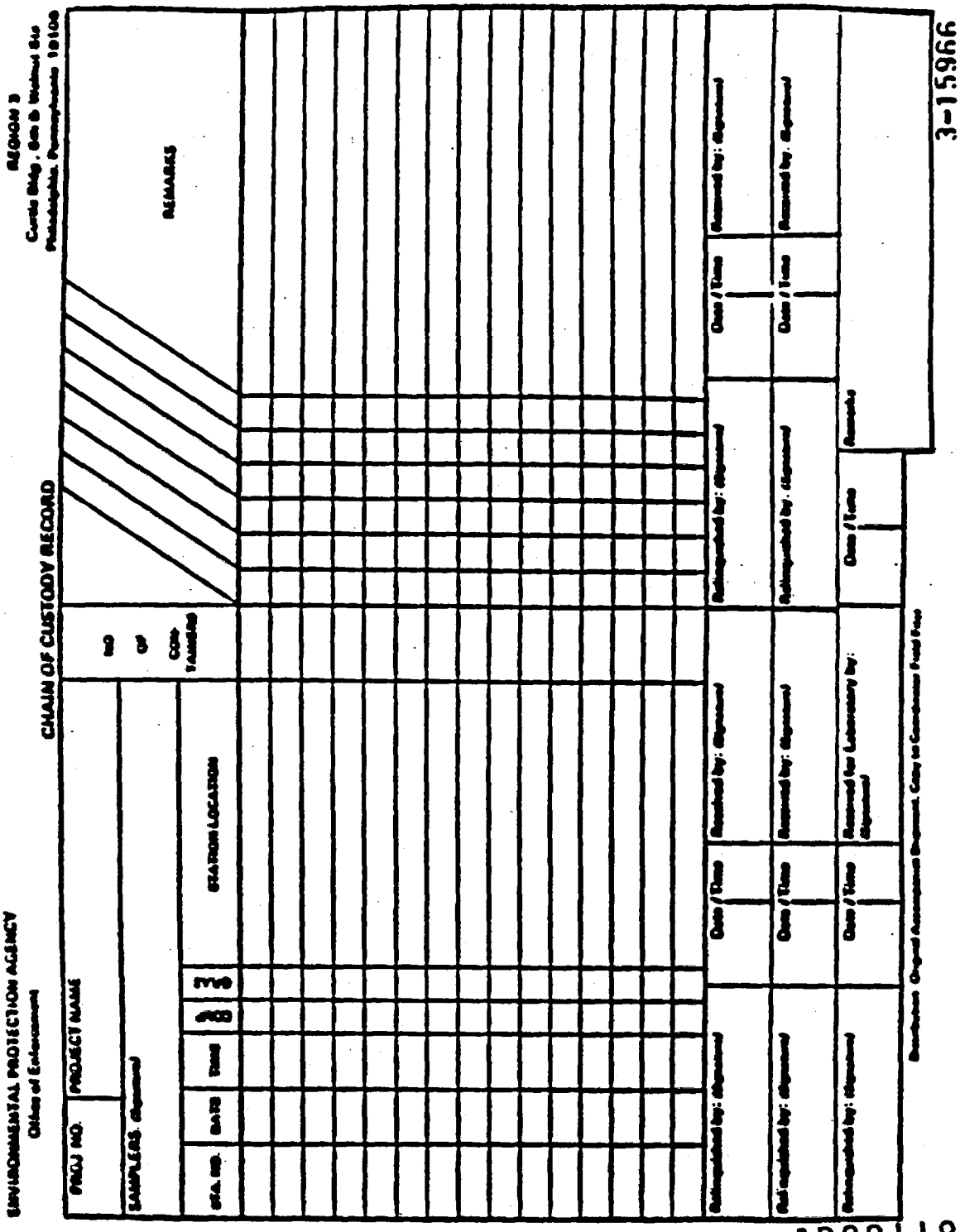

3-15966

AR301184

ATTACHMENT C-3

CHAIN-OF-CUSTODY RECORD FORM FOR USE IN REGION III
(Original is 8-1/2 x 11 3/4")

U.S. ENVIRONMENTAL PROTECTION AGENCY
CLP Sample Management Office
P.O. Box 818 - Alexandria, Virginia 22313
Phone: 703/557-2490 - FTS/557-2490

SAS Number

SPECIAL ANALYTICAL SERVICE
PACKING LIST

Sampling Office:	Sampling Date(s):	Ship To:	For Lab Use Only
Sampling Contact: (name)	Date Shipped:		Date Samples Rec'd:
(phone)	Site Name/Code:	Attn:	Received By:

	Sample Numbers	Sample Description i.e., Analysis, Matrix, Concentration	Sample Condition on Receipt at Lab
1.			
2.			
3.			
4.			
5.			
6.			
7.			
8.			
9.			
10.			
11.			
12.			
13.			
14.			
15.			
16.			
17.			
18.			
19.			
20.			

For Lab Use Only

White - SMO Copy, Yellow - Region Copy, Pink - Lab Copy for return to SMO, Gold - Lab Copy

SAMPLE MANAGEMENT OFFICE
P.O. BOX 818 ALEXANDRIA, VA 22313
703/557-2490 FTS-557-2490

CASE NO.

SAS NO. (IF APPLICABLE)

ORGANIC TRAFFIC REPORT

(FOR CLP USE ONLY)

TYPE OF ACTIVITY (CIRCLE ONE) ①

SUPERFUND—PA SI ESI RIFS RD RA ER NPLD O&M OTHER _____

NON-SUPERFUND— _____ PROGRAM

SITE NAME

CITY, STATE.

SITE SPILL ID:

REGION NO

SAMPLING COMPANY ②

SAMPLER: (NAME)

SHIP TO: ③

ATTN: _____

SAMPLING DATE: ④

BEGIN: _____ END: _____

DATE SHIPPED: _____ CARRIER: _____ ⑤

AIRBILL NO: _____

SAMPLE DESCRIPTION

(ENTER IN BOX A)

1. SURFACE WATER
2. GROUND WATER
3. LEACHATE
4. SOIL
5. SEDIMENT
6. OIL (SAS)
7. WASTE (SAS)

TRIPLE VOLUME REQUIRED FOR MATRIX SPIKE/DUPLICATE AQUEOUS SAMPLE

SHIP MEDIUM AND HIGH CONCENTRATION SAMPLES IN PAINT CANS

SEE REVERSE FOR ADDITIONAL INSTRUCTIONS

CLP SAMPLE NUMBER (FROM LABELS)	SAMPLE DESCRIPTION (FROM BOX 1) 1 2 3 4 5 6 7	CONCENTRATION L = LOW/MED H = HIGH (SAS)	RAS ANALYSIS				SPECIAL HANDLING	STATION LOCATION
			VOLATILE	BASE/NEUT ACID	PESTICIDE /PCB's			

AR301186

EPA Form 2075-7 (8-87)

WHITE — SMO COPY PINK — CLIENT COPY WHITE — LAB COPY FOR RETURN TO SMO YELLOW — LAB COPY

EPA CONTRACT LABORATORY PROGRAM
SAMPLE MANAGEMENT OFFICE
P O BOX 818, ALEXANDRIA, VA 22313
703/557-2490, FTS 557-2490

CASE NO:

SAS NO (IF APPLICABLE)

INORGANIC TRAFFIC REPORT

(FOR CLP USE ONLY)

TYPE OF ACTIVITY (CIRCLE ONE) ①
SUPERFUND—PA SI ESI RIFS RD RA ER NPLD C&M OTHER _____
NON-SUPERFUND— _____ PROGRAM

SITE NAME

CITY STATE SITE SPILL ID:

REGION NO SAMPLING COMPANY ②

SAMPLER (NAME)

SHIP TO: ③

ATTN:

SAMPLING DATE. ④

BEGIN: _____ END: _____

DATE SHIPPED: _____ CARRIER: _____ ⑤

AIRBILL NO:

SAMPLE DESCRIPTION
(ENTER IN BOX A)
1 SURFACE WATER
2. GROUND WATER
3. LEACHATE
4 SOIL
5 SEDIMENT
6 OIL (SAS)
7 WASTE SAS)

DOUBLE VOLUME REQUIRED FOR MATRIX SPIKE/DUPLICATE AQUEOUS SAMPLE

SHIP MEDIUM AND HIGH CONCENTRATION SAMPLES IN PAINT CANS

SEE REVERSE FOR ADDITIONAL INSTRUCTIONS

CLP SAMPLE NUMBER (FROM LABELS)	A SAMPLE DESCRIPTION (FROM BOX 1) 1 2 3 4 5 6 7	B CONCENTRATION L = LOW M = MED H = HIGH (SAS)	C RAS ANALYSIS: TOTAL METALS	CYANIDE	DISSOLVED METALS	HIGH ONLY (SAS): SULFIDE	pH	CONDUCTIVITY	CHLORIDE	D SPECIAL HANDLING	E STATION LOCATION

AR301187

EPA Form 2075-6 (8-87)

WHITE — SMO COPY PINK — CLIENT COPY YELLOW — LAB COPY FOR RETURN TO SMO

EBASCO PROJECT: _____

SAMPLE NO. _____

DATE: ___/___/___ TIME: _____ HRS

MEDIUM: _____

TYPE: GRAB ☐ COMPOSITE ☐

PRESERVATION: _____

ANALYSIS: _____

SAMPLED BY: _____

LAB NO.: _____

REMARKS: _____

ATTACHMENT A

SAMPLE LABEL

☆ GPO 505-852

Designate: Grab / Comp

Time

Month/Day/Year

Station No.

Project Code

Samplers (Signatures)

Station Location

Preservative:
Yes ☐ No ☐

ANALYSES

BOD Anions Solids (TSS) (TDS) (SS)	
COD, TOC, Nutrients	
Phenolics	
Mercury	
Metals	
Cyanide	
Oil and Grease	
Organics GC/MS	
Priority Pollutants	
Volatile Organics	
Pesticides	
Mutagenicity	
Bacteriology	

Remarks:

Tag No.	Lab Sample No.
3 60966	

UNITED STATES ENVIRONMENTAL PROTECTION AGENCY

EPA

ATTACHMENT B

SAMPLE IDENTIFICATION TAG

NUS CORPORATION
A Halliburton Company

SAMPLE LOG SHEET

☐ Monitoring Well Data
☐ Domestic Well Data
☐ Other _____

Page ____ of ____
Case # _____
By _____

Project Site Name _____ Project Site Number _____
NUS Source No. _____ Source Location _____

Total Well Depth:	Purge Data				
Well Casing Size & Depth	Volume	pH	S.C.	Temp (°C)	Color & Turbidity
Static Water Level:					
One Casing Volume:					
Start Purge (hrs.):					
End Purge (hrs.):					
Total Purge Time (min.):					
Total Amount Purged (gal.):					
Monitor Reading:					
Purge Method:					
Sample Method:					
Depth Sampled:					

Sample Date & Time:	Sample Data			
	pH	S.C.	Temp. (°C)	Color & Turbidity
Sampled By:				

Signature(s):

Observations / Notes:

Type of Sample
☐ Low Concentration
☐ High Concentration
☐ Grab
☐ Composite
☐ Grab - Composite

Analysis	Preservative		Organic	Inorganic
		Traffic Report #		
		Tag #		
		AB #		
		Date Shipped		
		Time Shipped		
		Lab		
		Volume		
		Chain-of-Custody #		

AR301190

NUS CORPORATION
A Halliburton Company

SAMPLE LOG SHEET

Page ____ of ____

- Surface Soil
- Subsurface Soil
- Sediment
- Lagoon / Pond
- Other _____

Case # _____

By _____

Project Site Name _____ Project Site Number _____

NUS Source # _____ Source Location _____

Sample Method	Composite Sample Data		
	Sample	Time	Color Description
Depth Sampled:			
Sample Date & Time:			
Sampled By			
Signature(s):			
Type of Sample - Low Concentration - High Concentration - Grab - Composite - Grab - Composite			
	Sample Data		
	Color	Description. (Sand, Clay, Dry, Moist, Wet, etc.)	
Analysis:	Observations / Notes		
		Organic	Inorganic
	Traffic Report #		
	Tag #		
	AB #		
	Date Shipped		
	Time Shipped		
	Lab		
	Volume		

AR301191

NUS CORPORATION
A Halliburton Company

SAMPLE LOG SHEET

Page ____ of ____

Case # ____

By ____

- Spring
- Lake
- Stream
- Other ____

Project Site Name ____ Project Site Number ____

NUS Source No. ____ Source Location ____

Sample Method	Sample Data			
	pH	S.C.	Temp (°C)	Color & Turbidity
Depth Sampled				
Sample Date & Time				
Sampled By				
Signatures:				

Type of Sample

- Low Concentration
- High Concentration
- Grab
- Composite
- Grab - Composite

Analysis	Preservative

	Organic	Inorganic
Traffic Report #		
Tag #		
AB #		
Date Shipped		
Time Shipped		
Lab		
Volume		

AR301192

ATTACHMENT 3
(Sheet 1 of 2)
FT-13.01 REV. 3

WEEKLY FIELD SUMMARY REPORT

SUNDAY

Date : _____ Personnel _____ _____
Weather: _____ Onsite _____ _____
_____ _____

Site Activities: _____
_____
_____
_____

MONDAY

Date : _____ Personnel _____ _____
Weather: _____ Onsite _____ _____
_____ _____

Site Activities: _____
_____
_____
_____

TUESDAY

Date : _____ Personnel _____ _____
Weather: _____ Onsite _____ _____
_____ _____

Site Activities: _____
_____
_____
_____

AR301193

WEDNESDAY

Date : _____ Personnel _____ _____
Weather: _____ Onsite _____ _____
_____ _____

Site Activities: _____
_____
_____
_____

THURSDAY

Date : _____ Personnel _____ _____
Weather: _____ Onsite _____ _____
_____ _____

Site Activities: _____
_____
_____
_____

FRIDAY

Date : _____ Personnel _____ _____
Weather: _____ Onsite _____ _____
_____ _____

Site Activities: _____
_____
_____
_____

SATURDAY

Date : _____ Personnel _____ _____
Weather: _____ Onsite _____ _____
_____ _____

Site Activities: _____
_____
_____
_____

Figure 15-1

IEASCO SERVICES INCORPORATED
FIELD CHANGE REQUEST
-TYPICAL-

EPA Work Assignment No. _____ IEASCO Work Charge Number _____ Field Change No. _____

For _____

To _____ Location _____ Date _____

Description:

Reason For Change:

Recommended Disposition:

Field Operations Leader (Signature) _____ Date _____

Disposition:

Site Manager _____ Date _____

Distribution: Regional Manager
Quality Assurance Manager
Site Manager
Field Operations Leader

Others as required

EQUIPMENT CALIBRATION LOG

Instrument (Name, Model No./Serial No.): _____

Manufacturer _____ Date Purchased _____

Calibration Date	Initial Settings	Standard/Gas Used	Procedure	Adjustments Made	Final Settings	Signature	Comments

CASE NO / SASNO	LABORATORY NAME	SAMPLE MEDIA	ANALYSES	NO OF SAMPLES	TRAVEL REFERENCES	BLANK TRAVEL REFERENCES	DUPLICATE TRAVEL REFERENCES	[illegible]

[illegible] SHEET FOR PUMPING TEST (OBSERVATION WELL)
OR
[illegible] HYDRAULIC CONDUCTIVITY TEST

Site Number ____________________

Site Name ____________________

Type of Test ____________________

Location/
Well No. ____________________

Test No. ____________________

Start Time ____________________

Duration ____________________

Name of Observer ____________________

Drawdown measured by ____________________

Water level measurement
reference point ____________________

Barometric Pressure ____________________

Static water level
before test ____________________

Water sample collected
before test ____________________
after test ____________________

Date	Time	Depth to Water (Ft)	Drawdown or Head (Ft)	Correction	Corrected Drawdown or Head (Ft)	Elapsed Time (Min)	Remarks

AR301198

ATTACHMENT A
FT-6.05, REV. [illegible]

DATA SHEET FOR PUMPING TEST

Date of Test _____

Site Name _____

Type of Test _____

Location
Well No. _____

_____

_____

Test No. _____

Start Time _____

Duration _____

Name of Observer _____

Discharge measured by _____

Drawdown measured by
Water level measurement
reference point _____

Barometric Pressure _____

Static water level
before test _____

Water sample collected
before test _____
after test _____

Date	Time	Depth to Water (Ft)	Drawdown (Ft)	Elapsed Time (Min)	Manometer Reading (In)	Discharge (Gal/Min)	Remarks

AR301199

ATTACHMENT
FT-5.07, REV.

GROUNDWATER LEVEL MEASUREMENT SHEET

PROJECT NAME _____
PROJECT NO. _____
PERSONNEL _____
DATE _____

LOCATION MUNICIPALITY _____
COUNTY _____
STATE _____
STREET OR MAP LOCATION (IF OFF-SITE) _____

WEATHER CONDITIONS
TEMPERATURE RANGE _____
PRECIPITATION _____
BAROMETRIC PRESSURE _____

EQUIPMENT NO. _____
EQUIPMENT NAME _____
LATEST CALIBRATION DATE _____

TIDALLY-INFLUENCED [ ] YES [ ] NO

WELL OR PIEZOMETER NO.	DATE/ TIME	ELEVATION OF REFERENCE POINT (FEET)*	WATER LEVEL INDICATOR READING (FEET)*	ADJUSTED DEPTH (FEET)*	GROUNDWATER ELEVATION (FEET)*

* All elevations to nearest 0.01 feet.

AR301200

BORING LOG

PROJECT
PROJECT NO
ELEVATION
WATER LEVEL
DATE TIME

DATE
FIELD GEOLOGIST

BORING NO
DRILLER

[illegible]	[illegible]	[illegible]	[illegible]	[illegible]	MATERIAL DESCRIPTION*			USCS	REMARKS
					DENSITY CONSISTENCY OR ROCK HARDNESS	COLOR	MATERIAL CLASSIFICATION		

AR301201

REMARKS

BORING

PAGE

* See Legend on Back

[illegible]
[illegible] SURFACE INVESTIGATION

Site Name: [illegible]yden TCE Project No.: _____

EPA Region: III Location: Bucks County, Pennsylvania

Date: _____ Arrival Time: _____ Departure Time: _____

Co[illegible]: [illegible]n Mathes & Assoc. Driller: _____

_____ Drill Rig: _____

Item	Original Quantity (2) Estimate	Quantity Today (2)	Previous Total (2) Quantity	Cumulative Quantity To Date
1. Mobilization/Demob.	Lot			
2. Monitoring Well Drilling	[illegible]0 ft.			
a. With Soil Sampling at 5 ft. Intervals				
b. Without Soil Sampling	250 ft.			
c. Additional Drilling	200 ft.			
3. Monitoring Well Construction/Installation	1100 ft.			
4. Additional Well Construction/Installation	200 ft.			
5. Flush Mounted Protective Casing Installation	10			
6. Boring Backfill	200 ft.			
7. Well Development	27 hr.			
8. Site Access	20 hr.			
9. Waste Containerization	15 hr.			
10. Standby	20 hr.			
11. [illegible] Level of Protection				
a. Level C - Multiplier 1.35%				
b. Level B - Multiplier 1.50%				

Comments:

(1) As Listed in Specs
(2) Include Quantity and Units

Approved by:

AR301202

NUS Field Representative

Driller or Representative

Form Rev 0

NUS CORPORATION
A Halliburton Company

BORING NO. _____

BEDROCK MONITORING WELL SHEET

WELL INSTALLED IN BEDROCK

PROJECT _____ LOCATION _____ DRILLER _____
PROJECT NO. _____ BORING _____ DRILLING METHOD _____
ELEVATION _____ DATE _____ DEVELOPMENT METHOD _____
FIELD GEOLOGIST _____

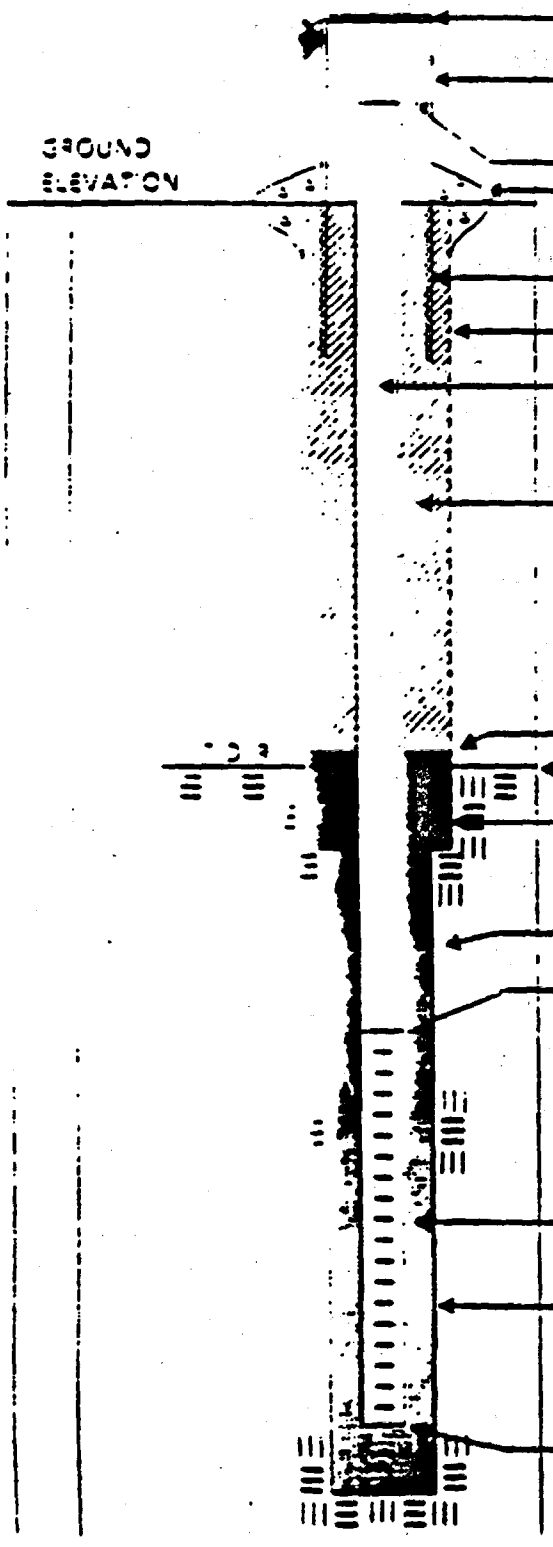

ELEVATION OF TOP OF SURFACE CASING _____

STICKUP OF CASING ABOVE GROUND SURFACE _____

ELEVATION TOP OF RISER _____

TYPE OF SURFACE SEAL _____

I D OF SURFACE CASING: _____

DIAMETER OF HOLE: _____

RISER PIPE I D: _____

TYPE OF RISER PIPE: _____

TYPE OF BACKFILL: _____

ELEVATION / DEPTH TOP OF SEAL: _____

ELEVATION / DEPTH TOP OF BEDROCK _____

TYPE OF SEAL: _____

ELEVATION / DEPTH TOP OF SAND _____

ELEVATION / DEPTH TOP OF SCREEN: _____

TYPE OF SCREEN: _____

SLOT SIZE x LENGTH: _____

I D SCREEN: _____

TYPE OF SAND PACK: _____

DIAMETER OF HOLE IN BEDROCK: _____

CORE / REAM: _____

ELEVATION / DEPTH BOTTOM SCREEN: _____

ELEVATION / DEPTH BOTTOM OF HOLE: _____

AR301203

NUS CORPORATION
A Halliburton Company

BORING NO. ____

OVERBURDEN MONITORING WELL SHEET

PROJECT ____ LOCATION ____
PROJECT NO. ____ BORING ____
ELEVATION ____ DATE ____
FIELD GEOLOGIST ____

DRILLER ____
DRILLING METHOD ____
DEVELOPMENT METHOD ____

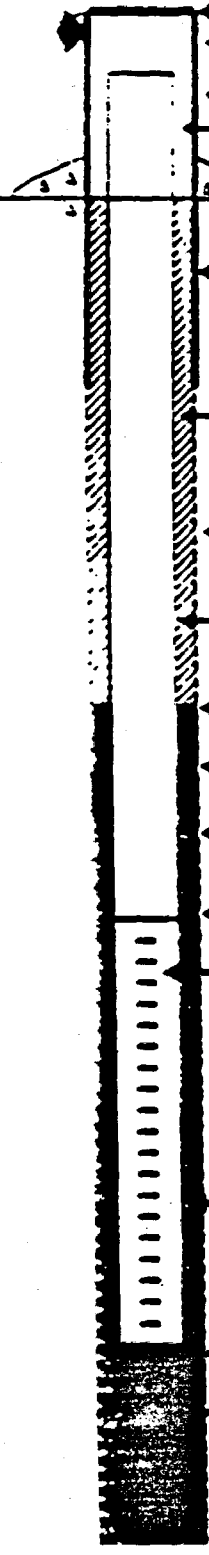

ELEVATION OF TOP OF SURFACE CASING ____
ELEVATION OF TOP OF RISER PIPE: ____

STICK - UP TOP OF SURFACE CASING: ____
STICK - UP RISER PIPE : ____

TYPE OF SURFACE SEAL: ____

I.D. OF SURFACE CASING: ____
TYPE OF SURFACE CASING: ____

RISER PIPE I.D. ____
TYPE OF RISER PIPE: ____

BOREHOLE DIAMETER: ____

TYPE OF BACKFILL: ____

ELEVATION / DEPTH TOP OF SEAL: ____

TYPE OF SEAL: ____

DEPTH TOP OF SAND PACK: ____

ELEVATION / DEPTH TOP OF SCREEN: ____

TYPE OF SCREEN: ____

SLOT SIZE x LENGTH: ____

I.D. OF SCREEN: ____

TYPE OF SAND PACK: ____

AR301204

ELEVATION / DEPTH BOTTOM OF SCREEN: ____

ELEVATION / DEPTH BOTTOM OF SAND PACK: ____
TYPE OF BACKFILL BELOW OBSERVATION WELL: ____

RECEIPT FOR SAMPLES

EPA WORK ASSIGNMENT NUMBER _____

EBASCO WORK CHARGE NO. ____	PROJECT NAME
SAMPLERS (Signature)	
Split Samples Offered	( ) Accepted ( ) Declined

Name of Facility

Facility Location

STA. NO.	DATE	TIME	COMP.	GRAB	SPLIT SAMPLES	TAG NUMBERS	STATION DESCRIPTION	NO. OF CONTAINERS	REMARKS

Transferred by: (Signature)	Received by: (Signature) Telephone
Date Time	Title Date Time

ATTACHMENT E

RECEIPT FOR SAMPLES FORM
(Original is 8½ x 11")

AR301205

FT-7.15
REVISION 1

page___ of ___

EPA SAMPLE SHIPPING LOG FOR ALL SAMPLES SENT THROUGH THE CONTRACT LAB PROGRAM (12/85 version)

CASE#__________ SAS#__________ SITE NAME:______________________________

Site Leader:______________________ EPA Project Officer:______________________

Phone:

SAS REQUEST: (details required)

QC SAMPLE INFO AND/OR COMMENTS	CONC. (low/ med/ high)	SAMPLE PHASE (aq/ sol)	TYPE OF REQUEST org, dio inor, SAS	SAMPLE TRAFFIC REPORT NUMBER	ORGANICS OR INORGANICS												
							DATA RECEIVED XX out - items not requested										
					LAB NAME	DATE SHIPPED	VOA	BNA	PEST	TCDD	METALS	CN	LAB NAME	SAS REQUEST (itemize)	DATE SHIPPED	DATA REC'D

AR301206

TEST PIT LOG

NUS CORPORA

PROJECT:

TEST PIT NO

PROJECT NO

DATE:

LOCATION

FIELD GEOLOGIST

DEPTH (ft)	LITHOLOGY CHANGE (Depth ft)	MATERIAL DESCRIPTION (Soil Density / Consistency, Color)	USCS	REMARKS

Test Pit Cross Section and / or Plan View

REMARKS

AR301207

PHOTO LOG

TEST PIT

PAI

D

APPENDIX D

CONTRACT LABORATORY PROGRAM
SAS REQUEST FORMS

Croydon #1

U.S ENVIRONMENTAL PROTECTION AGENCY
CLP SAMPLE MANAGEMENT OFFICE
P.O. BOX 818 - ALEXANDRIA, VIRGINIA 22313
PHONE: 703/557-2490 - FTS/557-2490

SAS Number-

SPECIAL ANALYTICAL SERVICES
Client Request

Regional Transmittal

Telephone Request

A. EPA Region/Client: EPA-Region III - REM III

B. RSCC Representative: Colleen Walling

C. Telephone Number: (301) 266-9180

D. Date of Request: September 22, 1988

E. Site Name: Croydon TCE Site, Bucks County, Pennsylvania

Please provide below description of your request for Special Analytical Services under the Contract Laboratory Program. In order to most efficiently obtain laboratory capability for your request, please address the following considerations, if applicable. Incomplete or erroneous information may result in a delay in the processing of your request. Please continue response on additional sheets, or attach supplementary information as needed.

1. General Description of analytical service requested:

   Analysis of 60 groundwater samples and 21 rinsate blanks for VOAs by EPA Methods 601 and 602. Second column confirmation of positives >1 ug/l is required. A purge and trap volatiles analysis of a 5 ml water sample analyzed on a gas chromatagraph equipped with a Hall Detector and Photoionization Detector (PID) is required.

2. Definition and number of work units involved (specify whether whole samples or fractions; whether organics or inorganics; whether aqueous or soil and sediments; and whether low, medium, or high concentration):

   60 low concentration groundwater samples; 3 field duplicate; 3 lab duplicate; and 21 low concentration rinsate blanks for a total of 87 work units for VOAs by EPA Methods 601 and 602. Second column confirmation is required.

3. Purpose of analysis (specify whether Superfund (enforcement or remedial action), RCRA, NPDES, etc.):

   Superfund - RI/FS - REM III
   Account No:

SAS Approved By (signature):
Date:

AR301210

4. **Estimated date(s) of collection:**

   November 21 - December 9, 1988 (3 weeks)

5. **Estimated date(s) and method of shipment:**

   November 21 - December 9, 1988 (3 weeks)

   Samples will be shipped daily by overnight air carrier. These dates are tentative and are dependent on the project remaining on schedule. Sampling may continue into the week of December 12.

6. **Number of days analysis and data required after laboratory receipt of samples:**

   40 days from receipt of the last sample.

7. **Analytical protocol required (attach copy if other than protocol currently used in this program):**

   EPA Methods 601/602 from "Methods for Organic Chemical Analysis of Municipal and Industrial Wastewater". EPA-600/4-82-057, July 1982. Second column confirmation is required. Method is attached. See Appendix A; Attachments #1 and #2 for specific requirements.

8. **Special technical instructions (if outside protocol requirements, specify compound names, CAS numbers, detection limits, etc.):**

   Second column confirmation is required. See Appendix A; Attachments #1 and #2 for specific requirements.

9. **Analytical results required (if known, specify format for data sheets, QA/QC reports, Chain-of-Custody documentation, etc.) If not completed, format of results will be left to program discretion.**

   Package format similar to CLP as per Exhibit B, Section II of the USEPA Contract Laboratory Program, Statement of Work for Organic Analysis, July 1987 Revision. See Appendix A; Attachments #1 and #2 and Note #4 for specific requirements.

10. **Other (use additional sheets or attach supplementary information, as needed):**

11. **Name of sampling/shipping contact:**

    Raymond Wattras - NUS Corp.
    (412) 788-1080

AR301211

12. Data Requirements

Parameter	Detection Limit	Precicion Desired (+% or Concentration)

Target Compounds - See Note #1, Appendix A, Attachment #1

Detection Limits - See Note #1, Appendix A

13. QC Requirements

Audits Required	Frequency of Audits	Limits (Percent or Concentration)
Quality Control Check Sample	4 Initially and then 1/10 samples	per Section 8.2.5 of attached method
Blanks	1/day of analysis	Below method detection limit.
Matrix Spike	1/10	per Section 8.3 of attached method
Matrix Spike Duplicate	1/10	per Section 8.3 of attached method

Initial and Continuing Calibration - See Notes #2 and #3, Appendix A and Attachment #2.

14. Action Required if Limits are Exceeded

As specified in the Attached Appendices and Attachments.

15. Request Prepared By:

Gregory L. Zimmerman - NUS Corporation - (412) 788-1080
September 22, 1988

16. Request Reviewed By (CRL use only):
Date:

Please return this request to the Sample Management Office as soon as possible to expedite processing of your request for Special Analytical Services. Should you have any questions or need any assistance, please contact your Regional representative at the Sample Management Office.

AR301212

APPENDIX A

NOTE 1.

Target compounds are halogenated volatile compounds from the CLP TCL plus benzene, toluene, ethyl benzene, xylene isomers, dichlorobenzene isomers and chlorobenzene. The required detection limits are 1 (ug/L). Sample results indicating levels > 1 (ug/L), must be confirmed using a second column analysis.

NOTE 2.

EPA Methods 601 and 602 from 40 CFR Part 136 of 10/26/84 with:

A. Initial 3 point calibration(5, 20, 40 ppb).
B. One method blank every 12 hours .
C. Calibration check standard run at 20 ppb every 12 hours.
D. Second column confirmation for positives(values greater than 1(ug/L)); the second column must be a different column than the first.
E. Brief description by laboratory on specific procedure.

NOTE 3.

Calculate and compare response of initial calibration and checks standards. If the % deviation in the response factor comparison is > than 25%, call DPO Chuck Sands or John Scalera at (301) 266-9180 prior to data submission. At the Sample Management Office (SMO), action determined by the degree of non-compliance may range from:

A. Only noting non-compliance in the report narrative.
B. Requiring a new initial calibration and a reanalysis of all samples asssociated with the unusable check standard.

NOTE 4.

Deliverables include a package format similar to CLP as per Exhibit B, Section II of the USEPA Contract Lab Program, 10/86 Statement of Work for Organic Analysis including all revisions up to the 7/87 Revision. Deliverables also include:

1. SAS Request Form.
2. All sample and standard chromatograms and quantitation lists.
3. Response factor calculations(initial calibration versus check standards).
4. Method blanks and duplicate chromatograms and quantitation lists.
5. All sample calculations.
6. Instrument run logs.
7. Narrative identifying instrument model, column used and operating parameters.
8. Chain-of-Custody Forms and sample SAS packing list.

ATTACHMENT # 1

Target Compound List:

601

Chloromethane
Bromomethane
Vinyl Chloride
Chloroethane
Methylene Chloride
1,1-Dichloroethene
1,1-Dichloriethane
Total-1,2-Dichloroethene (trans and cis isomers)
Chloroform
1,2-Dichloroethane
1,1,1-Trichloroethane
Carbon Tetrachloride
Bromodichloromethane
1,1,2,2-Tetrachloroethane
1,2-Dichloropropane
trans-1,3-Dichloropropene
Trichloroethene
Dibromochloromethane
1,1,2-Trichloroethane
cis-1,3-Dichloropropene
Bromoform
Tetrachloroethene
Chlorobenzene

602

Benzene
Toluene
Ethyl Benzene
Xylenes (total)

*Also optional analysis for:

(a) 1,2-dichlorobenzene;
(b) 1,3-dichlorobenzene;
(c) 1,4-dichlorobenzene;
(d) dichlorodifluoromethane (Freon) and
(e) trichlorofluoromethane (Freon)

Please note the first mentioned Freon may coelute with vinyl chloride in this method and result in a false positive analysis.

ATTACHMENT #2

Examples of Actions Related to Data Compliance

A. Example of non-compliance requiring little action: Laboratory notes non-compliance in narrative only, analysis proceeds.

Analysis is for all halocarbons listed in Attachment #1, but trichloroethene is of primary interest. Response factor of Bromodichloromethane changes 30% from initial calibration calculation to check standard response factor calculation. Laboratory must only note non-compliance in narrative.

B. Example of non-compliance requiring DPO/SMO action and intervention:

Analysis is for trichloroethene only. There are samples with positive trichloroethene results. Check standard response factor (>50%) different from initial calibration response factor. Laboratory notifies DPO. SMO requires a new initial calibration and reanalysis of all samples associated with the non-compliant check standard.

Table II Notes

[1] Polyethylene (P) or Glass (G)

[2] Sample preservation should be performed immediately upon sample collection. For composite chemical samples each aliquot should be preserved at the time of collection. When an automated sampler makes it impossible to preserve each aliquot, then chemical samples may be preserved by maintaining at 4°C until compositing and sample splitting is completed.

[3] When any sample is to be shipped by common carrier or sent through the United States Mails, it must comply with the Department of Transportation Hazardous Materials Regulations (49 CFR Parts 172). The person offering such material for transportation is responsible for ensuring such compliance. For the preservation requirements of Table II, the Office of Hazardous Materials, Materials Transportation Bureau, Department of Transportation has determined that the Hazardous Materials Regulations do not apply to the following materials: Hydrochloric acid (HCl) in water solutions at concentrations of 0.04% by weight or less (pH about 1.96 or greater), Nitric acid (HNO_3) in water solutions at concentrations of 0.15% by weight or less (pH about 1.62 or greater), Sulfuric acid (H_2SO_4) in water solutions at concentrations of 0.35% by weight or less (pH about 1.15 or greater), and Sodium hydroxide (NaOH) in water solutions at concentrations of 0.080% by weight or less (pH about 12.30 or less).

[4] Samples should be analyzed as soon as possible after collection. The times listed are the maximum times that samples may be held before analysis and still be considered valid. Samples may be held for longer periods only if the permittee, or monitoring laboratory, has data on file to show that the specific types of samples under study are stable for the longer time, and has received a variance from the Regional Administrator under § 136.3(e). Some samples may not be stable to the maximum time period given in the table. A permittee or monitoring laboratory is obligated to hold the sample for a shorter time if knowledge exists to show that this is necessary to maintain sample stability. See § 136.3(e) for details.

[5] Should only be used in the presence of residual chlorine.

[6] Maximum holding time is 24 hours when sulfide is present. Optionally, all samples may be tested with lead acetate paper before pH adjustments in order to determine if sulfide is present. If sulfide is present, it can be removed by the addition of cadmium nitrate powder until a negative spot test is obtained. The sample is filtered and then NaOH is added to pH 12.

[7] Samples should be filtered immediately on-site before adding preservative for dissolved metals.

[8] Guidance applies to samples to be analyzed by GC, LC, or GC/Ms for specific compounds.

[9] Sample receiving no pH adjustment must be analyzed within seven days of sampling.

[10] The pH adjustment is not required if acrolein will not be measured. Samples for acrolein receiving no pH adjustment must be analyzed within 3 days of sampling.

[11] When the extractable analytes of concern fall within a single chemical category, the specified preservative and maximum holding times should be observed for optimum safeguard of sample integrity. When the analytes of concern fall within two or more chemical categories, the sample may be preserved by cooling to 4°C, reducing residual chlorine with 0.008% sodium thiosulfate, storing in the dark, and adjusting the pH to 6-9; samples preserved in this manner may be held for seven days before extraction and for forty days after extraction. Exceptions to this optional preservation and holding time procedure are noted in footnote 5 (for the requirement for thiosulfate reduction of residual chlorine) and footnotes 12, 13 (for the analysis of benzidines).

[12] If 1,2-diphenylhydrazine is likely to be present, adjust the pH of the sample to 4.0±0.2 to prevent rearrangement to benzidine.

[13] Extracts may be stored up to 7 days before analysis if storage is conducted under an inert (oxygen-free) atmosphere.

[14] For the analysis of diphenylnitrosamine, add 0.008% $Na_2S_2O_3$ and adjust pH to 7-10 with NaOH within 24 hours of sampling.

[15] The pH adjustment may be performed upon receipt at the laboratory and may be omitted if the samples are extracted within 72 hours of collection. For the analysis of aldrin, add 0.008% $Na_2S_2O_3$.

8. Appendices A, B, and C are added to Part 136 to read as follows:

APPENDIX A TO PART 136—METHODS FOR ORGANIC CHEMICAL ANALYSIS OF MUNICIPAL AND INDUSTRIAL WASTEWATER.

Method 601—Purgeable Halocarbons

1. Scope and Application

1.1 This method covers the determination of 29 purgeable halocarbons.

The following parameters may be determined by this method:

Parameter	STORET No.	CAS No.
Bromodichloromethane	32101	75-27-4
Bromoform	32104	75-25-2
Bromomethane	34413	74-83-9
Carbon tetrachloride	32102	56-23-5
Chlorobenzene	34301	108-90-7
Chloroethane	34311	75-00-3
2-Chloroethylvinyl ether	34576	100-75-8
Chloroform	32106	67-66-3
Chloromethane	34418	74-87-3
Dibromochloromethane	32105	124-48-1
1,2-Dichlorobenzene	34536	95-50-1
1,3-Dichlorobenzene	34566	541-73-1
1,4-Dichlorobenzene	34571	106-46-7
Dichlorodifluoromethane	34668	75-71-8
1,1-Dichloroethane	34496	75-34-3
1,2-Dichloroethane	34531	107-06-2
1,1-Dichloroethene	34501	75-35-4
trans-1,2-Dichloroethene	34546	156-60-5
1,2-Dichloropropane	34541	78-87-5
cis-1,3-Dichloropropene	34704	10061-01-5
trans-1,3-Dichloropropene	34699	10061-02-6
Methylene chloride	34423	75-09-2
1,1,2,2-Tetrachloroethane	34516	79-34-5
Tetrachloroethene	34475	127-18-4
1,1,1-Trichloroethane	34506	71-55-6
1,1,2-Trichloroethane	34511	79-00-5
Trichloroethene	39180	79-01-6
Trichlorofluoromethane	34488	75-69-4
Vinyl chloride	39175	75-01-4

1.2 This is a purge and trap gas chromatographic (GC) method applicable to the determination of the compounds listed above in municipal and industrial discharges as provided under 40 CFR 136.1. When this method is used to analyze unfamiliar samples for any or all of the compounds above, compound identifications should be supported by at least one additional qualitative technique. This method describes analytical conditions for a second gas chromatographic column that can be used to confirm measurements made with the primary column. Method 624 provides gas chromatograph/mass spectrometer (GC/MS) conditions appropriate for the qualitative and quantitative confirmation of results for most of the parameters listed above.

1.3 The method detection limit (MDL, defined in Section 12.1)[1] for each parameter is listed in Table 1. The MDL for a specific wastewater may differ from those listed, depending upon the nature of interferences in the sample matrix.

1.4 Any modification of this method, beyond those expressly permitted, shall be considered as a major modification subject to application and approval of alternate test procedures under 40 CFR 136.4 and 136.5.

1.5 This method is restricted to use by or under the supervision of analysts experienced in the operation of a purge and trap system and a gas chromatograph and in the interpretation of gas chromatograms. Each analyst must demonstrate the ability to generate acceptable results with this method using the procedure described in Section 8.2.

2. Summary of Method

2.1 An inert gas is bubbled through a 5-mL water sample contained in a specially-designed purging chamber at ambient temperature. The halocarbons are efficiently transferred from the aqueous phase to the vapor phase. The vapor is swept through a sorbent trap where the halocarbons are trapped. After purging is completed, the trap is heated and backflushed with the inert gas to desorb the halocarbons onto a gas chromatographic column. The gas chromatograph is temperature programmed to separate the halocarbons which are then detected with a halide-specific detector.[2,3]

2.2 The method provides an optional gas chromatographic column that may be helpful in resolving the compounds of interest from interferences that may occur.

3. Interferences

3.1 Impurities in the purge gas and organic compounds outgassing from the plumbing ahead of the trap account for the majority of contamination problems. The analytical system must be demonstrated to be free from contamination under the conditions of the analysis by running laboratory reagent blanks as described in Section 8.1.3. The use of non-Teflon plastic tubing, non-Teflon thread sealants, or flow controllers with rubber components in the purge and trap system should be avoided.

3.2 Samples can be contaminated by diffusion of volatile organics (particularly fluorocarbons and methylene chloride) through the septum seal into the sample during shipment and storage. A field reagent blank prepared from reagent water and carried through the sampling and handling protocol can serve as a check on such contamination.

3.3 Contamination by carry-over can occur whenever high level and low level samples are sequentially analyzed. To reduce carry-over, the purging device and sample syringe must be rinsed with reagent water between sample analyses. Whenever an unusually concentrated sample is encountered, it should be followed by an analysis of reagent water to check for cross contamination. For samples containing large amounts of water-soluble materials, suspended solids, high boiling compounds or high organohalide levels, it may be necessary to wash out the purging device with a detergent solution, rinse it with distilled water, and then dry it in a 105°C oven between analyses. The trap and other parts of the system are also subject to contamination; therefore, frequent bakeout and purging of the entire system may be required.

4. Safety

4.1 The toxicity or carcinogenicity of each reagent used in this method has not been precisely defined; however, each chemical compound should be treated as a potential health hazard. From this viewpoint, exposure to these chemicals must be reduced to the lowest possible level by whatever means available. The laboratory is responsible for maintaining a current awareness file of OSHA regulations regarding the safe handling of the chemicals specified in this method. A reference file of material data handling sheets should also be made available to all personnel involved in the chemical analysis. Additional references to laboratory safety are available and have been identified[4,5,6] for the information of the analyst.

AR 301216

4.2 The following parameters covered by this method have been tentatively classified as known or suspected, human or mammalian carcinogens: carbon tetrachloride, chloroform, 1,4-dichlorobenzene, and vinyl chloride. Primary standards of these toxic compounds should be prepared in a hood. A NIOSH/MESA approved toxic gas respirator should be worn when the analyst handles high concentrations of these toxic compounds.

5. Apparatus and Materials

5.1 Sampling equipment, for discrete sampling.

5.1.1 Vial—25-mL capacity or larger, equipped with a screw cap with a hole in the center (Pierce #13075 or equivalent). Detergent wash, rinse with tap and distilled water, and dry at 105 °C before use.

5.1.2 Septum—Teflon-faced silicone (Pierce #12722 or equivalent). Detergent wash, rinse with tap and distilled water, and dry at 105 °C for 1 h before use.

5.2 Purge and trap system—The purge and trap system consists of three separate pieces of equipment: a purging device, trap, and desorber. Several complete systems are now commercially available.

5.2.1 The purging device must be designed to accept 5-mL samples with a water column at least 3 cm deep. The gaseous head space between the water column and the trap must have a total volume of less than 15 mL. The purge gas must pass through the water column as finely divided bubbles with a diameter of less than 3 mm at the origin. The purge gas must be introduced no more than 5 mm from the base of the water column. The purging device illustrated in Figure 1 meets these design criteria.

5.2.2 The trap must be at least 25 cm long and have an inside diameter of at least 0.105 in. The trap must be packed to contain the following minimum lengths of adsorbents: 1.0 cm of methyl silicone coated packing (Section 6.3.3), 7.7 cm of 2,6-diphenylene oxide polymer (Section 6.3.2), 7.7 cm of silica gel (Section 6.3.4), 7.7 cm of coconut charcoal (Section 6.3.1). If it is not necessary to analyze for dichlorodifluoromethane, the charcoal can be eliminated, and the polymer section lengthened to 15 cm. The minimum specifications for the trap are illustrated in Figure 2.

5.2.3 The desorber must be capable of rapidly heating the trap to 180 °C. The polymer section of the trap should not be heated higher than 180 °C and the remaining sections should not exceed 200 °C. The desorber illustrated in Figure 2 meets these design criteria.

5.2.4 The purge and trap system may be assembled as a separate unit or be coupled to a gas chromatograph as illustrated in Figures 3 and 4.

5.3 Gas chromatograph—An analytical system complete with a temperature programmable gas chromatograph suitable for on-column injection and all required accessories including syringes, analytical columns, gases, detector, and strip-chart recorder. A data system is recommended for measuring peak areas.

5.3.1 Column 1—8 ft long x 0.1 in. ID stainless steel or glass, packed with 1% SP-1000 on Carbopack B (60/80 mesh) or equivalent. This column was used to develop the method performance statements in Section 12. Guidelines for the use of alternate column packings are provided in Section 10.1.

5.3.2 Column 2—6 ft long x 0.1 in. ID stainless steel or glass, packed with chemically bonded n-octane on Porasil-C (100/120 mesh) or equivalent.

5.3.3 Detector—Electrolytic conductivity or microcoulometric detector. These types of detectors have proven effective in the analysis of wastewaters for the parameters listed in the scope (Section 1.1). The electrolytic conductivity detector was used to develop the method performance statements in Section 12. Guidelines for the use of alternate detectors are provided in Section 10.1.

5.4 Syringes—5-mL glass hypodermic with Luerlok tip (two each), if applicable to the purging device.

5.5 Micro syringes—25-µL, 0.006 in. ID needle.

5.6 Syringe valve—2-way, with Luer ends (three each).

5.7 Syringe—5-mL, gas-tight with shut-off valve.

5.8 Bottle—15-mL, screw-cap, with Teflon cap liner.

5.9 Balance—Analytical, capable of accurately weighing 0.0001 g.

6. Reagents

6.1 Reagent water—Reagent water is defined as a water in which an interferent is not observed at the MDL of the parameters of interest.

6.1.1 Reagent water can ge generated by passing tap water through a carbon filter bed containing about 1 lb of activated carbon (Filtrasorb-300, Calgon Corp., or equivalent).

6.1.2 A water purification system (Millipore Super-Q or equivalent) may be used to generate reagent water.

6.1.3 Reagent water may also be prepared by boiling water for 15 min. Subsequently, while maintaining the temperature at 90 °C, bubble a contaminant-free inert gas through the water for 1 h. While still hot, transfer the water to a narrow mouth screw-cap bottle and seal with a Teflon-lined septum and cap.

6.2 Sodium thiosulfate—(ACS) Granular.

6.3 Trap Materials:

6.3.1 Coconut charcoal—6/10 mesh sieved to 26 mesh. Barnebey Cheney, CA-580-26 lot # M-2649 or equivalent.

6.3.2 2,6-Diphenylene oxide polymer—Tenax, (60/80 mesh), chromatographic grade or equivalent.

6.3.3 Methyl silicone packing—3% OV-1 on Chromosorb-W (60/80 mesh) or equivalent.

6.3.4 Silica gel—35/60 mesh, Davison, grade-15 or equivalent.

6.4 Methanol—Pesticide quality or equivalent.

6.5 Stock standard solutions—Stock standard solutions may be prepared from pure standard materials or purchased as certified solutions. Prepare stock standard solutions in methanol using assayed liquids or gases as appropriate. Because of the toxicity of some of the organohalides, primary dilutions of these materials should be prepared in a hood. A NIOSH/MESA approved toxic gas respirator should be used when the analyst handles high concentrations of such materials.

6.5.1 Place about 9.8 mL of methanol into a 10-mL ground glass stoppered volumetric flask. Allow the flask to stand, unstoppered, for about 10 min or until all alcohol wetted surfaces have dried. Weigh the flask to the nearest 0.1 mg.

6.5.2 Add the assayed reference material:

6.5.2.1 Liquid—Using a 100 µL syringe, immediately add two or more drops of assayed reference material to the flask, then reweigh. Be sure that the drops fall directly into the alcohol without contacting the neck of the flask.

6.5.2.2 Gases—To prepare standards for any of the six halocarbons that boil below 30 °C (bromomethane, chloroethane, chloromethane, dichlorodifluoromethane, trichlorofluoromethane, vinyl chloride), fill a 5-mL valved gas-tight syringe with the reference standard to the 5.0-mL mark. Lower the needle to 5 mm above the methanol meniscus. Slowly introduce the reference standard above the surface of the liquid (the heavy gas will rapidly dissolve into the methanol).

6.5.3 Reweigh, dilute to volume, stopper, then mix by inverting the flask several times. Calculate the concentration in µg/µL from the net gain in weight. When compound purity is assayed to be 96% or greater, the weight can be used without correction to calculate the concentration of the stock standard. Commercially prepared stock standards can be used at any concentration if they are certified by the manufacturer or by an independent source.

6.5.4 Transfer the stock standard solution into a Teflon-sealed screw-cap bottle. Store, with minimal headspace, at −10 to −20 °C and protect from light.

6.5.5 Prepare fresh standards weekly for the six gases and 2-chloroethylvinyl ether. All other standards must be replaced after one month, or sooner if comparison with check standards indicates a problem.

6.6 Secondary dilution standards—Using stock standard solutions, prepare secondary dilution standards in methanol that contain the compounds of interest, either singly or mixed together. The secondary dilution standards should be prepared at concentrations such that the aqueous calibration standards prepared in Sections 7.3.1 or 7.4.1 will bracket the working range of the analytical system. Secondary dilution standards should be stored with minimal headspace and should be checked frequently for signs of degradation or evaporation, especially just prior to preparing calibration standards from them.

6.7 Quality control check sample concentrate—See Section 8.2.1.

7. Calibration

7.1 Assemble a purge and trap system that meets the specifications in Section 5.2. Condition the trap overnight at 180 °C by backflushing with an inert gas flow of at least 20 mL/min. Condition the trap for 10 min once daily prior to use.

7.2 Connect the purge and trap system to a gas chromatograph. The gas chromatograph must be operated using temperature and flow

AR 300121.7

rate conditions equivalent to those given in Table 1. Calibrate the purge and trap-gas chromatographic system using either the external standard technique (Section 7.3) or the internal standard technique (Section 7.4).

7.3 External standard calibration procedure:

7.3.1 Prepare calibration standards at a minimum of three concentration levels for each parameter by carefully adding 20.0 µL of one or more secondary dilution standards to 100, 500, or 1000 mL of reagent water. A 25-µL syringe with a 0.006 in. ID needle should be used for this operation. One of the external standards should be at a concentration near, but above, the MDL (Table 1) and the other concentrations should correspond to the expected range of concentrations found in real samples or should define the working range of the detector. These aqueous standards can be stored up to 24 h, if held in sealed vials with zero headspace as described in Section 9.2. If not so stored, they must be discarded after 1 h.

7.3.2 Analyze each calibration standard according to Section 10, and tabulate peak height or area responses versus the concentration in the standard. The results can be used to prepare a calibration curve for each compound. Alternatively, if the ratio of response to concentration (calibration factor) is a constant over the working range (<10% relative standard deviation, RSD), linearity through the origin can be assumed and the average ratio or calibration factor can be used in place of a calibration curve.

7.4 Internal standard calibration procedure—To use this approach, the analyst must select one or more internal standards that are similar in analytical behavior to the compounds of interest. The analyst must further demonstrate that the measurement of the internal standard is not affected by method or matrix interferences. Because of these limitations, no internal standard can be suggested that is applicable to all samples. The compounds recommended for use as surrogate spikes in Section 8.7 have been used successfully as internal standards, because of their generally unique retention times.

7.4.1 Prepare calibration standards at a minimum of three concentration levels for each parameter of interest as described in Section 7.3.1.

7.4.2 Prepare a spiking solution containing each of the internal standards using the procedures described in Sections 6.5 and 6.6. It is recommended that the secondary dilution standard be prepared at a concentration of 15 µg/mL of each internal standard compound. The addition of 10 µL of this standard to 5.0 mL of sample or calibration standard would be equivalent to 30 µg/L.

7.4.3 Analyze each calibration standard according to Section 10, adding 10 µL of internal standard spiking solution directly to the syringe (Section 10.4). Tabulate peak height or area responses against concentration for each compound and internal standard, and calculate response factors (RF) for each compound using Equation 1.

Equation 1.

$$RF = \frac{(A_s)(C_{is})}{(A_{is})(C_s)}$$

where:

A_s = Response for the parameter to be measured.

A_{is} = Response for the internal standard.

C_{is} = Concentration of the internal standard.

C_s = Concentration of the parameter to be measured.

If the RF value over the working range is a constant (<10% RSD), the RF can be assumed to be invariant and the average RF can be used for calculations. Alternatively, the results can be used to plot a calibration curve of response ratios, A_s/A_{is} vs. RF.

7.5 The working calibration curve, calibration factor, or RF must be verified on each working day by the measurement of a QC check sample.

7.5.1 Prepare the QC check sample as described in Section 8.2.2.

7.5.2 Analyze the QC check sample according to Section 10.

7.5.3 For each parameter, compare the response (Q) with the corresponding calibration acceptance criteria found in Table 2. If the responses for all parameters of interest fall within the designated ranges, analysis of actual samples can begin. If any individual Q falls outside the range, proceed according to Section 7.5.4.

Note: The large number of parameters in Table 2 present a substantial probability that one or more will not meet the calibration acceptance criteria when all parameters are analyzed.

7.5.4 Repeat the test only for those parameters that failed to meet the calibration acceptance criteria. If the response for a parameter does not fall within the range in this second test, a new calibration curve, calibration factor, or RF must be prepared for that parameter according to Section 7.3 or 7.4.

8. *Quality Control*

8.1 Each laboratory that uses this method is required to operate a formal quality control program. The minimum requirements of this program consist of an initial demonstration of laboratory capability and an ongoing analysis of spiked samples to evaluate and document data quality. The laboratory must maintain records to document the quality of data that is generated. Ongoing data quality checks are compared with established performance criteria to determine if the results of analyses meet the performance characteristics of the method. When results of sample spikes indicate atypical method performance, a quality control check standard must be analyzed to confirm that the measurements were performed in an in-control mode of operation.

8.1.1 The analyst must make an initial, one-time, demonstration of the ability to generate acceptable accuracy and precision with this method. This ability is established as described in Section 8.2.

8.1.2 In recognition of advances that are occurring in chromatography, the analyst is permitted certain options (detailed in Section 10.1) to improve the separations or lower the cost of measurements. Each time such a modification is made to the method, the analyst is required to repeat the procedure in Section 8.2.

8.1.3 Each day, the analyst must analyze a reagent water blank to demonstrate that interferences from the analytical system are under control.

8.1.4 The laboratory must, on an ongoing basis, spike and analyze a minimum of 10% of all samples to monitor and evaluate laboratory data quality. This procedure is described in Section 8.3.

8.1.5 The laboratory must, on an ongoing basis, demonstrate through the analyses of quality control check standards that the operation of the measurement system is in control. This procedure is described in Section 8.4. The frequency of the check standard analyses is equivalent to 10% of all samples analyzed but may be reduced if spike recoveries from samples (Section 8.3) meet all specified quality control criteria.

8.1.6 The laboratory must maintain performance records to document the quality of data that is generated. This procedure is described in Section 8.5.

8.2 To establish the ability to generate acceptable accuracy and precision, the analyst must perform the following operations.

8.2.1 A quality control (QC) check sample concentrate is required containing each parameter of interest at a concentration of 10 µg/mL in methanol. The QC check sample concentrate must be obtained from the U.S. Environmental Protection Agency, Environmental Monitoring and Support Laboratory in Cincinnati, Ohio, if available. If not available from that source, the QC check sample concentrate must be obtained from another external source. If not available from either source above, the QC check sample concentrate must be prepared by the laboratory using stock standards prepared independently from those used for calibration.

8.2.2 Prepare a QC check sample to contain 20 µg/L of each parameter by adding 200 µL of QC check sample concentrate to 100 mL of reagent water.

8.2.3 Analyze four 5-mL aliquots of the well-mixed QC check sample according to Section 10.

8.2.4 Calculate the average recovery ($\bar{X}$) in µg/L, and the standard deviation of the recovery (s) in µg/L, for each parameter of interest using the four results.

8.2.5 For each parameter compare s and $\bar{X}$ with the corresponding acceptance criteria for precision and accuracy, respectively, found in Table 2. If s and $\bar{X}$ for all parameters of interest meet the acceptance criteria, the system performance is acceptable and analysis of actual samples can begin. If any individual s exceeds the precision limit or any individual $\bar{X}$ falls outside the range for accuracy, then the system performance is unacceptable for that parameter.

Note: The large number of parameters in Table 2 present a substantial probability that one or more will fail at least one of the acceptance criteria when all parameters are analyzed.

8.2.6 When one or more of the parameters tested fail at least one of the acceptance

AR 301218

criteria, the analyst must proceed according to Section 8.2.6.1 or 8.2.6.2.

8.2.6.1 Locate and correct the source of the problem and repeat the test for all parameters of interest beginning with Section 8.2.3.

8.2.6.2 Beginning with Section 8.2.3, repeat the test only for those parameters that failed to meet criteria. Repeated failure, however, will confirm a general problem with the measurement system. If this occurs, locate and correct the source of the problem and repeat the test for all compounds of interest beginning with Section 8.2.3.

8.3 The laboratory must, on an ongoing basis, spike at least 10% of the samples from each sample site being monitored to assess accuracy. For laboratories analyzing one to ten samples per month, at least one spiked sample per month is required.

8.3.1 The concentration of the spike in the sample should be determined as follows:

8.3.1.1 If, as in compliance monitoring, the concentration of a specific parameter in the sample is being checked against a regulatory concentration limit, the spike should be at that limit or 1 to 5 times higher than the background concentration determined in Section 8.3.2, whichever concentration would be larger.

8.3.1.2 If the concentration of a specific parameter in the sample is not being checked against a limit specific to that parameter, the spike should be at 20 µg/L or 1 to 5 times higher than the background concentration determined in Section 8.3.2, whichever concentration would be larger.

8.3.2 Analyze one 5-mL sample aliquot to determine the background concentration (B) of each parameter. If necessary, prepare a new QC check sample concentrate (Section 8.2.1) appropriate for the background concentrations in the sample. Spike a second 5-mL sample aliquot with 10 µL of the QC check sample concentrate and analyze it to determine the concentration after spiking (A) of each parameter. Calculate each percent recovery (P) as 100(A-B)%/T, where T is the known true value of the spike.

8.3.3 Compare the percent recovery (P) for each parameter with the corresponding QC acceptance criteria found in Table 2. These acceptance criteria were calculated to include an allowance for error in measurement of both the background and spike concentrations, assuming a spike to background ratio of 5:1. This error will be accounted for to the extent that the analyst's spike to background ratio approaches 5:1.[7] If spiking was performed at a concentration lower than 20 µg/L, the analyst must use either the QC acceptance criteria in Table 2, or optional QC acceptance criteria calculated for the specific spike concentration. To calculate optional acceptance criteria for the recovery of a parameter: (1) Calculate accuracy (X') using the equation in Table 3, substituting the spike concentration (T) for C; (2) calculate overall precision (S') using the equation in Table 3, substituting X' for $\bar{X}$; (3) calculate the range for recovery at the spike concentration as $(100\,X'/T) \pm 2.44(100\,S'/T)\%$.[7]

8.3.4 If any individual P falls outside the designated range for recovery, that parameter has failed the acceptance criteria. A check standard containing each parameter that failed the criteria must be analyzed as described in Section 8.4.

8.4 If any parameter fails the acceptance criteria for recovery in Section 8.3, a QC check standard containing each parameter that failed must be prepared and analyzed.

Note: The frequency for the required analysis of a QC check standard will depend upon the number of parameters being simultaneously tested, the complexity of the sample matrix, and the performance of the laboratory. If the entire list of parameters in Table 2 must be measured in the sample in Section 8.3, the probability that the analysis of a QC check standard will be required is high. In this case the QC check standard should be routinely analyzed with the spiked sample.

8.4.1 Prepare the QC check standard by adding 10 µL of QC check sample concentrate (Sections 8.2.1 or 8.3.2) to 5 mL of reagent water. The QC check standard needs only to contain the parameters that failed criteria in the test in Section 8.3.

8.4.2 Analyze the QC check standard to determine the concentration measured (A) of each parameter. Calculate each percent recovery (P_s) as 100 (A/T)%, where T is the true value of the standard concentration.

8.4.3 Compare the percent recovery (P_s) for each parameter with the corresponding QC acceptance criteria found in Table 2. Only parameters that failed the test in Section 8.3 need to be compared with these criteria. If the recovery of any such parameter falls outside the designated range, the laboratory performance for that parameter is judged to be out of control, and the problem must be immediately identified and corrected. The analytical result for that parameter in the unspiked sample is suspect and may not be reported for regulatory compliance purposes.

8.5 As part of the QC program for the laboratory, method accuracy for wastewater samples must be assessed and records must be maintained. After the analysis of five spiked wastewater samples as in Section 8.3, calculate the average percent recovery ($\bar{P}$) and the standard deviation of the percent recovery (s_p). Express the accuracy assessment as a percent recovery interval from $\bar{P} - 2s_p$ to $\bar{P} + 2s_p$. If $\bar{p} = 90\%$ and $s_p = 10\%$, for example, the accuracy interval is expressed as 70-110%. Update the accuracy assessment for each parameter on a regular basis (e.g. after each five to ten new accuracy measurements).

8.6 It is recommended that the laboratory adopt additional quality assurance practices for use with this method. The specific practices that are most productive depend upon the needs of the laboratory and the nature of the samples. Field duplicates may be analyzed to assess the precision of the environmental measurements. When doubt exists over the identification of a peak on the chromatogram, confirmatory techniques such as gas chromatography with a dissimilar column, specific element detector, or mass spectrometer must be used. Whenever possible, the laboratory should analyze standard reference materials and participate in relevant performance evaluation studies.

8.7 The analyst should monitor both the performance of the analytical system and the effectiveness of the method in dealing with each sample matrix by spiking each sample, standard, and reagent water blank with surrogate halocarbons. A combination of bromochloromethane, 2-bromo-1-chloropropane, and 1,4-dichlorobutane is recommended to encompass the range of the temperature program used in this method. From stock standard solutions prepared as in Section 8.5, add a volume to give 750 µg of each surrogate to 45 mL of reagent water contained in a 50-mL volumetric flask, mix and dilute to volume for a concentration of 15 ng/µL. Add 10 µL of this surrogate spiking solution directly into the 5-mL syringe with every sample and reference standard analyzed. Prepare a fresh surrogate spiking solution on a weekly basis. If the internal standard calibration procedure is being used, the surrogate compounds may be added directly to the internal standard spiking solution (Section 7.4.2).

9. Sample Collection, Preservation, and Handling

9.1 All samples must be iced or refrigerated from the time of collection until analysis. If the sample contains free or combined chlorine, add sodium thiosulfate preservative (10 mg/40 mL is sufficient for up to 5 ppm Cl_2) to the empty sample bottle just prior to shipping to the sampling site. EPA Methods 330.4 and 330.5 may be used for measurement of residual chlorine.[8] Field test kits are available for this purpose.

9.2 Grab samples must be collected in glass containers having a total volume of at least 25 mL. Fill the sample bottle just to overflowing in such a manner that no air bubbles pass through the sample as the bottle is being filled. Seal the bottle so that no air bubbles are entrapped in it. If preservative has been added, shake vigorously for 1 min. Maintain the hermetic seal on the sample bottle until time of analysis.

9.3 All samples must be analyzed within 14 days of collection.[9]

10. Procedure

10.1 Table 1 summarizes the recommended operating conditions for the gas chromatograph. Included in this table are estimated retention times and MDL that can be achieved under these conditions. An example of the separations achieved by Column 1 is shown in Figure 5. Other packed columns, chromatographic conditions, or detectors may be used if the requirements of Section 8.2 are met.

10.2 Calibrate the system daily as described in Section 7.

10.3 Adjust the purge gas (nitrogen or helium) flow rate to 40 mL/min. Attach the trap inlet to the purging device, and set the purge and trap system to purge (Figure 3). Open the syringe valve located on the purging device sample introduction needle.

10.4 Allow the sample to come to ambient temperature prior to introducing it to the syringe. Remove the plunger from a 5-mL syringe and attach a closed syringe valve. Open the sample bottle (or standard) and carefully pour the sample into the syringe barrel to just short of overflowing. Replace the syringe plunger and compress the sample. Open the syringe valve and vent any residual

AR301219

AR 301219

air while adjusting the sample volume to 5.0 mL. Since this process of taking an aliquot destroys the validity of the sample for future analysis, the analyst should fill a second syringe at this time to protect against possible loss of data. Add 10.0 µL of the surrogate spiking solution (Section 8.7) and 10.0 µL of the internal standard spiking solution (Section 7.4.2), if applicable, through the valve bore, then close the valve.

10.5 Attach the syringe-syringe valve assembly to the syringe valve on the purging device. Open the syringe valves and inject the sample into the purging chamber.

10.6 Close both valves and purge the sample for 11.0±0.1 min at ambient temperature.

10.7 After the 11-min purge time, attach the trap to the chromatograph, adjust the purge and trap system to the desorb mode (Figure 4), and begin to temperature program the gas chromatograph. Introduce the trapped materials to the GC column by rapidly heating the trap to 180 °C while backflushing the trap with an inert gas between 20 and 60 mL/min for 4 min. If rapid heating of the trap cannot be achieved, the GC column must be used as a secondary trap by cooling it to 30 °C (subambient temperature, if poor peak geometry or random retention time problems persist) instead of the initial program temperature of 45 °C

10.8 While the trap is being desorbed into the gas chromatograph, empty the purging chamber using the sample introduction syringe. Wash the chamber with two 5-mL rinses of reagent water.

10.9 After desorbing the sample for 4 min, condition the trap by returning the purge and trap system to the purge mode. Wait 15 s then close the syringe valve on the purging device to begin gas flow through the trap. The trap temperature should be maintained at 180 °C After approximately 7 min, turn off the trap heater and open the syringe valve to stop the gas flow through the trap. When the trap is cool, the next sample can be analyzed.

10.10 Identify the parameters in the sample by comparing the retention times of the peaks in the sample chromatogram with those of the peaks in standard chromatograms. The width of the retention time window used to make identifications should be based upon measurements of actual retention time variations of standards over the course of a day. Three times the standard deviation of a retention time for a compound can be used to calculate a suggested window size; however, the experience of the analyst should weigh heavily in the interpretation of chromatograms.

10.11 If the response for a peak exceeds the working range of the system, prepare a dilution of the sample with reagent water from the aliquot in the second syringe and reanalyze.

11. Calculations

11.1 Determine the concentration of individual compounds in the sample.

11.1.1 If the external standard calibration procedure is used, calculate the concentration of the parameter being measured from the peak response using the calibration curve or calibration factor determined in Section 7.3.2.

11.1.2 If the internal standard calibration procedure is used, calculate the concentration in the sample using the response factor (RF) determined in Section 7.4.3 and Equation 2

Equation 2.

$$\text{Concentration } (\mu g/L) = \frac{(A_x)(C_{is})}{(A_{is})(RF)}$$

where:

A_x = Response for the parameter to be measured.

A_{is} = Response for the internal standard.

C_{is} = Concentration of the internal standard.

11.2 Report results in µg/L without correction for recovery data. All QC data obtained should be reported with the sample results.

12. Method Performance

12.1 The method detection limit (MDL) is defined as the minimum concentration of a substance that can be measured and reported with 99% confidence that the value is above zero.[8] The MDL concentrations listed in Table 1 were obtained using reagent water.[9] Similar results were achieved using representative wastewaters. The MDL actually achieved in a given analysis will vary depending on instrument sensitivity and matrix effects.

12.2 This method is recommended for use in the concentration range from the MDL to 1000×MDL. Direct aqueous injection techniques should be used to measure concentration levels above 1000×MDL.

12.3 This method was tested by 20 laboratories using reagent water, drinking water, surface water, and three industrial wastewaters spiked at six concentrations over the range 8.0 to 500 µg/L.[9] Single operator precision, overall precision, and method accuracy were found to be directly related to the concentration of the parameter and essentially independent of the sample matrix. Linear equations to describe these relationships are presented in Table 3.

References

1. 40 CFR Part 136, Appendix B.
2. Bellar, T.A., and Lichtenberg, J.J. "Determining Volatile Organics at Microgram-per-Litre-Levels by Gas Chromatography," *Journal of the American Water Works Association*, 66, 739 (1974).
3. Bellar, T.A., and Lichtenberg, J.J. "Semi-Automated Headspace Analysis of Drinking Waters and Industrial Waters for Purgeable Volatile Organic Compounds." Proceedings from Symposium on Measurement of Organic Pollutants in Water and Wastewater, American Society for Testing and Materials, STP 686, C.E. Van Hall, editor, 1978.
4. "Carcinogens—Working With Carcinogens," Department of Health, Education, and Welfare, Public Health Service, Center for Disease Control, National Institute for Occupational Safety and Health, Publication No. 77-208, August 1977.
5. "OSHA Safety and Health Standards, General Industry" (29 CFR 1910), Occupational Safety and Health Administration, OSHA 2206 (Revised, January 1976).
6. "Safety in Academic Chemistry Laboratories," American Chemical Society Publication, Committee on Chemical Safety, 3rd Edition, 1979.
7. Provost, L.P., and Elder, R.S. "Interpretation of Percent Recovery Data," *American Laboratory*, 15, 58-63 (1983). (The value 2.44 used in the equation in Section 8.3.3 is two times the value 1.22 derived in this report.)
8. "Methods 330.4 (Titrimetric, DPD-FAS) and 330.5 (Spectrophotometric, DPD) for Chlorine, Total Residual," Methods for Chemical Analysis of Water and Wastes, EPA 600/4-79-020, U.S. Environmental Protection Agency, Environmental Monitoring and Support Laboratory, Cincinnati, Ohio 45268, March 1979.
9. "EPA Method Validation Study 23, Method 601 (Purgeable Halocarbons)," Report for EPA Contract 68-03-2856 (in preparation).
10. "Method Validation Data for EPA Method 601," Memorandum from B. Potter, U.S. Environmental Protection Agency, Environmental Monitoring and Support Laboratory, Cincinnati, Ohio 45268, November 10, 1983.

TABLE 1.—CHROMATOGRAPHIC CONDITIONS AND METHOD DETECTION LIMITS

Parameter	Retention time (min)		Method detection limit (µg/L)
	Column 1	Column 2	
Chloromethane	1.93	5.28	0.08
Bromomethane	2.17	7.05	0.10
Dichlorodifluoromethane	2.62	nd	nd
Vinyl chloride	2.67	5.28	0.19
Chloroethane	3.33	8.69	0.53
Methylene chloride	5.25	10.1	0.28
Trichlorofluoromethane	7.19	nd	nd
1,1-Dichloroethene	7.99	7.72	0.13
1,1-Dichloroethane	8.30	12.8	0.07
trans-1,2-Dichloroethene	10.1	9.39	0.16

AR301220

TABLE 1.—CHROMATOGRAPHIC CONDITIONS AND METHOD DETECTION LIMITS—Continued

Parameter	Retention time (min)		Method detection limit (µg/L)
	Column 1	Column 2	
Chloroform	10.7	12.1	0.06
1,2-Dichloroethane	11.4	15.4	0.03
1,1,1-Trichloroethane	12.6	13.1	0.03
Carbon tetrachloride	13.0	14.4	0.12
Bromodichloromethane	13.7	14.6	0.10
1,2-Dichloropropane	14.8	16.6	0.04
cis-1,3-Dichloropropene	15.2	16.6	0.34
Trichloroethene	15.6	13.1	0.12
Dibromochloromethane	16.5	16.6	0.09
1,1,2-Trichloroethane	16.5	18.1	0.02
trans-1,3-Dichloropropene	16.5	19.0	0.20
2-Chloroethylvinyl ether	18.0	nd	0.13
Bromoform	18.2	19.2	0.20
1,1,2,2-Tetrachloroethane	21.6	nd	0.03
Tetrachloroethene	21.7	15.0	0.03
Chlorobenzene	24.2	18.8	0.25
1,3-Dichlorobenzene	24.0	22.4	0.32
1,2-Dichlorobenzene	24.9	23.5	0.15
1,4-Dichlorobenzene	25.4	22.3	0.24

Column 1 conditions: Carbopack B (80/90 mesh) coated with 1% SP-1000 packed in an 8 ft x 0.1 in. ID stainless steel or glass column with helium carrier gas at 40 mL/min flow rate. Column temperature held at 45 °C for 3 min then programmed at 8 °C/min to 220 °C and held for 15 min.

Column 2 conditions: Porbit-C (100/120 mesh) coated with n-octane packed in a 8 ft x 0.1 in. ID stainless steel or glass column with helium carrier gas at 40 mL/min flow rate. Column temperature held at 50 °C for 3 min then programmed at 8 °C/min to 170 °C and held for 4 min.

nd = not determined.

TABLE 2.—CALIBRATION AND QC ACCEPTANCE CRITERIA—METHOD 601 *

Parameter	Range for Q (µg/L)	Limit for s (µg/L)	Range for $\bar{X}$ (µg/L)	Range P, P_s (%)
Bromodichloromethane	15.2-24.8	4.3	10.7-32.0	42-172
Bromoform	14.7-25.3	4.7	5.0-35.3	13-159
Bromomethane	11.7-28.3	7.6	2.4-24.5	D-144
Carbon tetrachloride	13.7-26.3	5.6	11.8-25.3	43-143
Chlorobenzene	14.4-25.6	5.0	10.2-27.4	38-150
Chloroethane	15.4-24.6	4.4	11.3-25.2	48-137
2-Chloroethylvinyl ether	12.0-28.0	6.3	4.6-35.6	14-186
Chloroform	15.0-25.0	4.5	12.4-24.0	63-133
Chloromethane	11.8-28.1	7.4	D-34.8	D-180
Dibromochloromethane	13.1-26.9	6.3	7.9-35.1	24-181
1,2-Dichlorobenzene	14.0-26.0	5.5	1.7-38.9	D-208
1,3-Dichlorobenzene	8.8-30.1	8.1	6.2-32.6	7-187
1,4-Dichlorobenzene	13.8-26.1	5.6	11.5-25.5	42-143
1,1-Dichloroethane	16.8-23.2	3.2	11.2-24.8	47-132
1,2-Dichloroethane	14.3-25.7	5.2	13.0-26.5	51-147
1,1-Dichloroethene	12.6-27.4	6.8	10.2-27.3	39-167
trans-1,2-Dichloroethene	12.6-27.2	6.4	11.4-27.1	38-156
1,2-Dichloropropane	14.8-25.2	5.2	10.1-29.9	44-156
cis-1,3-Dichloropropene	12.8-27.2	7.3	6.2-33.8	22-178
trans-1,3-Dichloropropene	12.8-27.2	7.3	6.2-33.8	22-178
Methylene chloride	15.5-24.5	4.0	7.0-27.8	25-162
1,1,2,2-Tetrachloroethane	9.8-30.2	9.2	6.6-31.8	8-184
Tetrachloroethene	14.0-26.0	5.4	6.1-29.8	39-162
1,1,1-Trichloroethane	14.2-25.8	4.9	10.8-24.8	41-138
1,1,2-Trichloroethane	15.7-24.3	3.9	8.8-25.4	39-136
Trichloroethene	16.4-24.6	4.2	8.2-28.6	36-146
Trichlorofluoromethane	13.3-26.7	6.0	7.4-28.1	21-156
Vinyl chloride	13.7-28.3	6.7	6.2-29.9	29-183

Q = Concentration measured in QC check sample, in µg/L (Section 7.5.2).
s = Standard deviation of four recovery measurements, in µg/L (Section 8.2.4).
$\bar{X}$ = Average recovery for four recovery measurements, in µg/L (Section 8.2.4).
P, P_s = Percent recovery measured (Section 8.3.2, Section 8.4.2).
D = Detected; result must be greater than zero.
* Criteria were calculated assuming a QC check sample concentration of 20 µg/L.

Note: These criteria are based directly upon the method performance data in Table 3. Where necessary, the limits for recovery have been broadened to assure applicability of the limits to concentrations below those used to develop Table 3.

TABLE 3.—METHOD ACCURACY AND PRECISION AS FUNCTIONS OF CONCENTRATION—METHOD 601

Parameter	Accuracy, as recovery, $\bar{X}$ (µg/L)	Single analyst precision, s (µg/L)	Overall precision, $\bar{S}$ (µg/L)
Bromodichloromethane	1.12C−1.02	0.11$\bar{X}$+0.04	0.20$\bar{X}$+1.00
Bromoform	0.98C−2.06	0.12$\bar{X}$+[illegible]	0.21$\bar{X}$+2.41
Bromomethane	0.78C−1.27	0.25$\bar{X}$+[illegible]	[illegible]$\bar{X}$+0.50
Carbon tetrachloride	0.98C−1.04	0.15$\bar{X}$−[illegible]	[illegible]$\bar{X}$+[illegible]
Chlorobenzene	1.00C−1.23	0.15$\bar{X}$−0.62	0.18$\bar{X}$+1.21
Chloroethane	0.96C−1.53	0.14$\bar{X}$−0.13	0.17$\bar{X}$+0.83
2-Chloroethylvinyl ether *	1.00C	0.20$\bar{X}$	0.36$\bar{X}$
Chloroform	0.93C−0.38	0.13$\bar{X}$+0.16	0.18$\bar{X}$−0.02
Chloromethane	0.77C+0.18	0.25$\bar{X}$−0.31	0.52$\bar{X}$+1.31
Dibromochloromethane	0.94C+2.72	0.11$\bar{X}$+1.10	0.24$\bar{X}$+1.88
1,2-Dichlorobenzene	0.93C+1.70	0.20$\bar{X}$+0.97	0.12$\bar{X}$+6.13

AR 301221

AR 301221

TABLE 3.—METHOD ACCURACY AND PRECISION AS FUNCTIONS OF CONCENTRATION—METHOD 601—Continued

Parameter	Accuracy, as recovery, X̄' (µg/L)	Single analyst precision, s_r' (µg/L)	Overall precision, S' (µg/L)
1,3-Dichlorobenzene	0.95C+0.43	0.14X̄+2.33	0.26X̄+2.34
1,4-Dichlorobenzene	0.83C−0.09	0.15X̄+0.29	0.20X̄+0.41
1,1-Dichloroethane	0.95C−1.08	0.08X̄+0.17	0.14X̄+0.84
1,2-Dichloroethane	1.04C−1.08	0.11X̄+0.70	0.15X̄+0.94
1,1-Dichloroethene	0.98C−0.87	0.21X̄+0.23	0.29X̄−0.48
trans-1,2-Dichloroethene	0.97C−0.18	0.11X̄+1.48	0.17X̄+1.48
1,2-Dichloropropane*	1.00C	0.13X̄	0.23X̄
cis-1,3-Dichloropropene*	1.00C	0.18X̄	0.32X̄
trans-1,3-Dichloropropene*	1.00C	0.18X̄	0.32X̄
Methylene chloride	0.91C−0.93	0.11X̄+0.33	0.21X̄+1.43
1,1,2,2-Tetrachloroethane	0.95C+0.19	0.14X̄+2.41	0.23X̄+2.79
Tetrachloroethene	0.94C+0.09	0.14X̄+0.38	0.18X̄+2.21
1,1,1-Trichloroethane	0.90C−0.16	0.15X̄+0.04	0.20X̄+0.37
1,1,2-Trichloroethane	0.86C+0.30	0.13X̄−0.14	0.19X̄+0.87
Trichloroethene	0.87C+0.48	0.13X̄−0.03	0.23X̄+0.39
Trichlorofluoromethane	0.89C−0.07	0.15X̄+0.67	0.26X̄+0.91
Vinyl chloride	0.87C−0.38	0.13X̄+0.68	0.27X̄+0.40

X̄' = Expected recovery for one or more measurements of a sample containing a concentration of C, in µg/L.
s_r' = Expected single analyst standard deviation of measurements at an average concentration found of X̄, in µg/L.
S' = Expected interlaboratory standard deviation of measurements at an average concentration found of X̄, in µg/L.
C = True value for the concentration, in µg/L.
X̄ = Average recovery found for measurements of samples containing a concentration of C, in µg/L.
* Estimates based upon the performance in a single laboratory.[18]

BILLING CODE 6560-50-M

AR301222

A

METHOD DETECTION LIMITS

601

Table 1. Chromatographic Conditions and Method Detection Limits

Parameter	Retention Time (min.) Column 1	Retention Time (min.) Column 2	Method Detection Limit µg/L
Chloromethane	1.50	5.28	0.08
Bromomethane	2.17	7.05	1.18
Dichlorodifluoromethane	2.62	nd	1.81
Vinyl chloride	2.67	5.28	0.18
Chloroethane	3.33	8.68	0.52
Methylene chloride	5.25	10.1	0.25
Trichlorofluoromethane	7.18	nd	nd
1,1-Dichloroethene	7.93	7.72	0.13
1,1-Dichloroethane	9.30	12.6	0.07
trans-1,2-Dichloroethene	10.1	9.38	0.10
Chloroform	10.7	12.1	0.05
1,2-Dichloroethane	11.4	15.4	0.03
1,1,1-Trichloroethane	12.6	13.1	0.03
Carbon tetrachloride	13.0	14.4	0.12
Bromodichloromethane	13.7	14.6	0.10
1,2-Dichloropropane	14.9	16.6	0.04
trans-1,3-Dichloropropene	15.2	16.6	0.34
Trichloroethene	15.8	13.1	0.12
Dibromochloromethane	16.5	16.6	0.09
1,1,2-Trichloroethane	16.5	18.1	0.02
cis-1,3-Dichloropropene	16.5	18.0	0.20
2-Chloroethylvinyl ether	18.0	nd	0.13
Bromoform	19.2	19.2	0.20
1,1,2,2-Tetrachloroethane	21.6	nd	0.03
Tetrachloroethene	21.7	15.0	0.03
Chlorobenzene	24.2	18.8	0.25
1,3-Dichlorobenzene	34.0	22.4	0.32
1,2-Dichlorobenzene	34.9	23.5	0.15
1,4-Dichlorobenzene	35.4	22.3	0.24

nd = not determined

Column 1 conditions: Carbopack B 60/80 mesh coated with 1% SP-1000 packed in an 8 ft × 0.1 in ID stainless steel or glass column with helium carrier gas at 40 mL/min flow rate. Column temperature held at 45°C for 3 min. then programmed at 8°C/min. to 220° and held for 15 min.

Column 2 conditions: Porasil-C 100/120 mesh coated with n-octane packed in a 6 ft × 0.1 in ID stainless steel or glass column with helium carrier gas at 40 mL/min flow rate. Column temperature held at 50°C for 3 min then programmed at 6°C/min to 170° and held for 4 min.

B

PRECISION DESIRED

601

TABLE 3.—METHOD ACCURACY AND PRECISION AS FUNCTIONS OF CONCENTRATION—METHOD 601

Parameter	Accuracy, as recovery, $\bar{X}$[1] (µg/L)	Single analyst precision, s_r[1] (µg/L)	Overall precision, S[1] (µg/L)
Bromodichloromethane	1.12C−1.02	0.11$\bar{X}$+0.04	0.20$\bar{X}$+1.00
Bromoform	0.98C−2.06	0.12$\bar{X}$+0.58	0.21$\bar{X}$+2.41
Bromomethane	0.78C−1.27	0.28$\bar{X}$+0.27	0.36$\bar{X}$+0.84
Carbon tetrachloride	0.98C−1.04	0.15$\bar{X}$+0.36	0.20$\bar{X}$+0.39
Chlorobenzene	1.00C−1.23	0.15$\bar{X}$−0.02	0.18$\bar{X}$+1.21
Chloroethane	0.89C−1.53	0.14$\bar{X}$−0.13	0.17$\bar{X}$+0.83
2-Chloroethylvinyl ether*	1.00C	0.20$\bar{X}$	0.36$\bar{X}$
Chloroform	0.93C−0.39	0.13$\bar{X}$+0.15	0.19$\bar{X}$−0.08
Chloromethane	0.77C+0.18	0.28$\bar{X}$−0.31	0.52$\bar{X}$+1.31
Dibromochloromethane	0.84C+2.72	0.11$\bar{X}$+1.10	0.24$\bar{X}$+1.88
1,2-Dichlorobenzene	0.83C+1.70	0.20$\bar{X}$+0.87	0.13$\bar{X}$+6.13
1,3-Dichlorobenzene	0.95C+0.43	0.14$\bar{X}$+2.33	0.26$\bar{X}$+2.34
1,4-Dichlorobenzene	0.83C−0.09	0.15$\bar{X}$+0.29	0.20$\bar{X}$+0.41
1,1-Dichloroethane	0.95C−1.08	0.08$\bar{X}$+0.17	0.14$\bar{X}$+0.94
1,2-Dichloroethane	1.04C−1.06	0.11$\bar{X}$+0.70	0.15$\bar{X}$+0.84
1,1-Dichloroethene	0.88C−0.87	0.21$\bar{X}$−0.23	0.29$\bar{X}$−0.40
trans-1,2-Dichloroethene	0.87C−0.18	0.11$\bar{X}$+1.46	0.17$\bar{X}$+1.46
1,2-Dichloropropane*	1.00C	0.13$\bar{X}$	0.23$\bar{X}$
cis-1,3-Dichloropropene*	1.00C	0.16$\bar{X}$	0.32$\bar{X}$
trans-1,3 Dichloropropene*	1.00C	0.16$\bar{X}$	0.32$\bar{X}$
Methylene chloride	0.81C−0.83	0.11$\bar{X}$+0.33	0.21$\bar{X}$+1.43
1,1,2,2-Tetrachloroethane	0.95C+0.18	0.14$\bar{X}$+2.41	0.23$\bar{X}$+2.79
Tetrachloroethene	0.94C+0.06	0.14$\bar{X}$+0.38	0.18$\bar{X}$+2.21
1,1,1-Trichloroethane	0.90C−0.18	0.15$\bar{X}$+0.04	0.20$\bar{X}$+0.37
1,1,2-Trichloroethane	0.88C+0.20	0.13$\bar{X}$−0.14	0.19$\bar{X}$+0.67
Trichloroethene	0.87C+0.48	0.13$\bar{X}$−0.03	0.23$\bar{X}$+0.30
Trichlorofluoromethane	0.89C−0.07	0.15$\bar{X}$+0.67	0.26$\bar{X}$+0.91
Vinyl chloride	0.87C−0.36	0.13$\bar{X}$+0.66	0.27$\bar{X}$+0.40

$\bar{X}$ = Expected recovery for one or more measurements of a sample containing a concentration of C, in µg/L.
s_r = Expected single analyst standard deviation of measurements at an average concentration found of $\bar{X}$, in µg/L.
S = Expected interlaboratory standard deviation of measurements at an average concentration found of $\bar{X}$, in µg/L.
C = True value for the concentration, in µg/L.
$\bar{X}$ = Average recovery found for measurements of samples containing a concentration of C, in µg/L.
* Estimates based upon the performance in a single laboratory.[10]

AR 301224

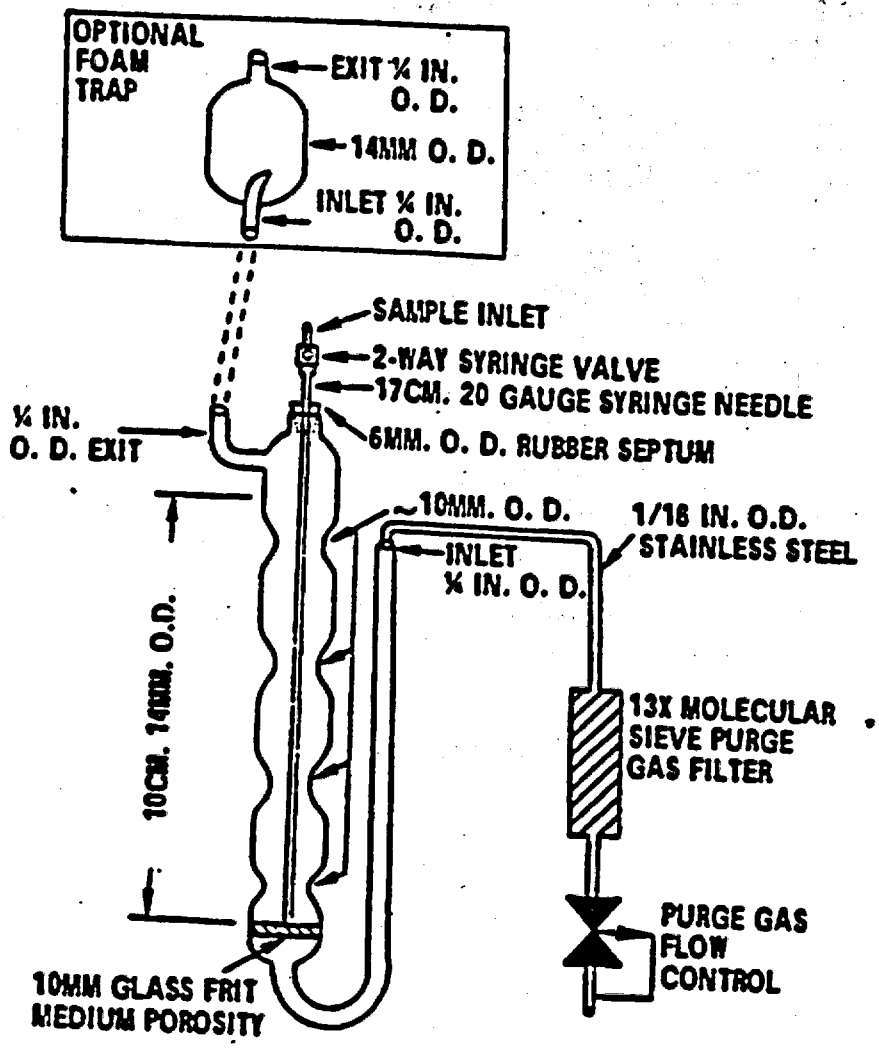

Figure 1. Purging device.

-170-

AR301225

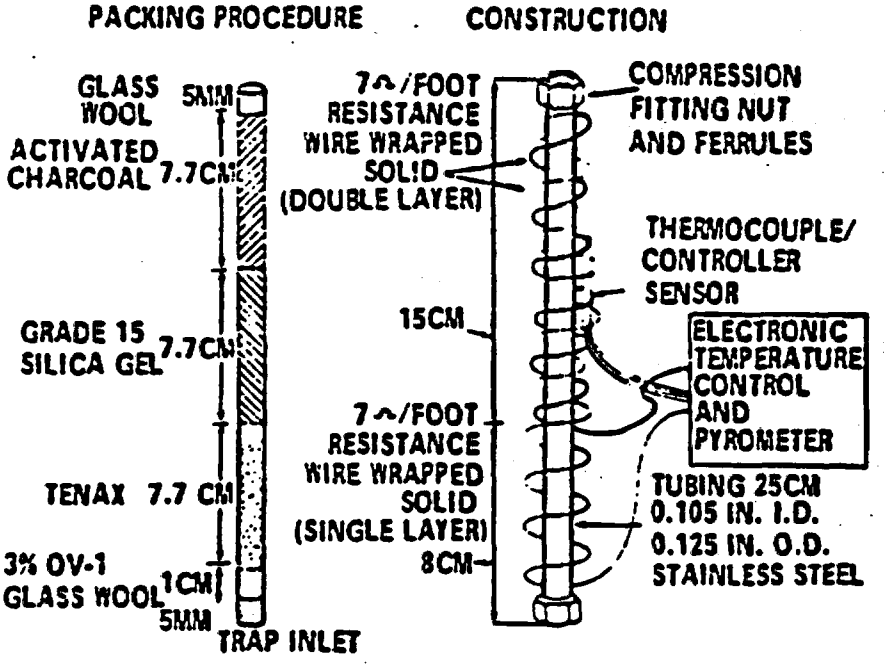

Figure 2. Trap packings and construction to include desorb capability

AR301226

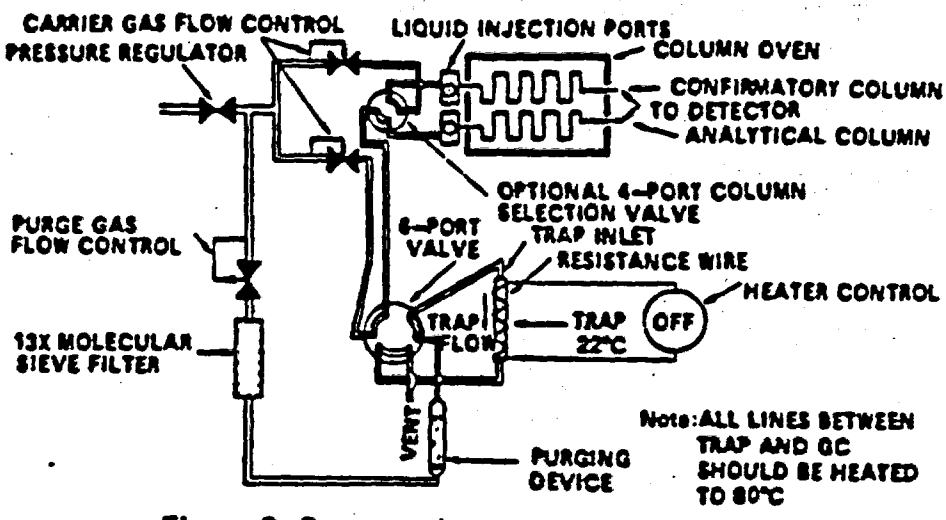

Figure 3. Purge and trap system-purge mode.

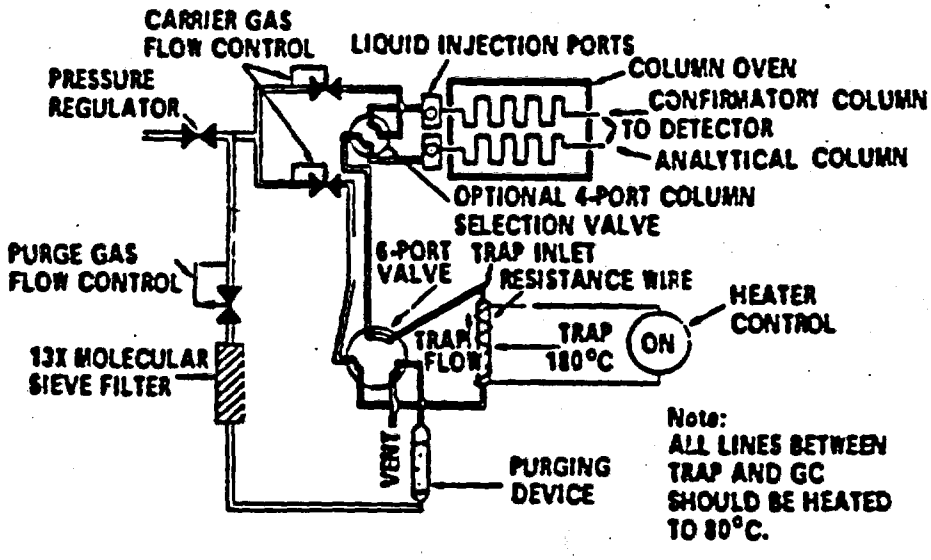

Figure 4. Purge and trap system - desorb mode.

AR301227

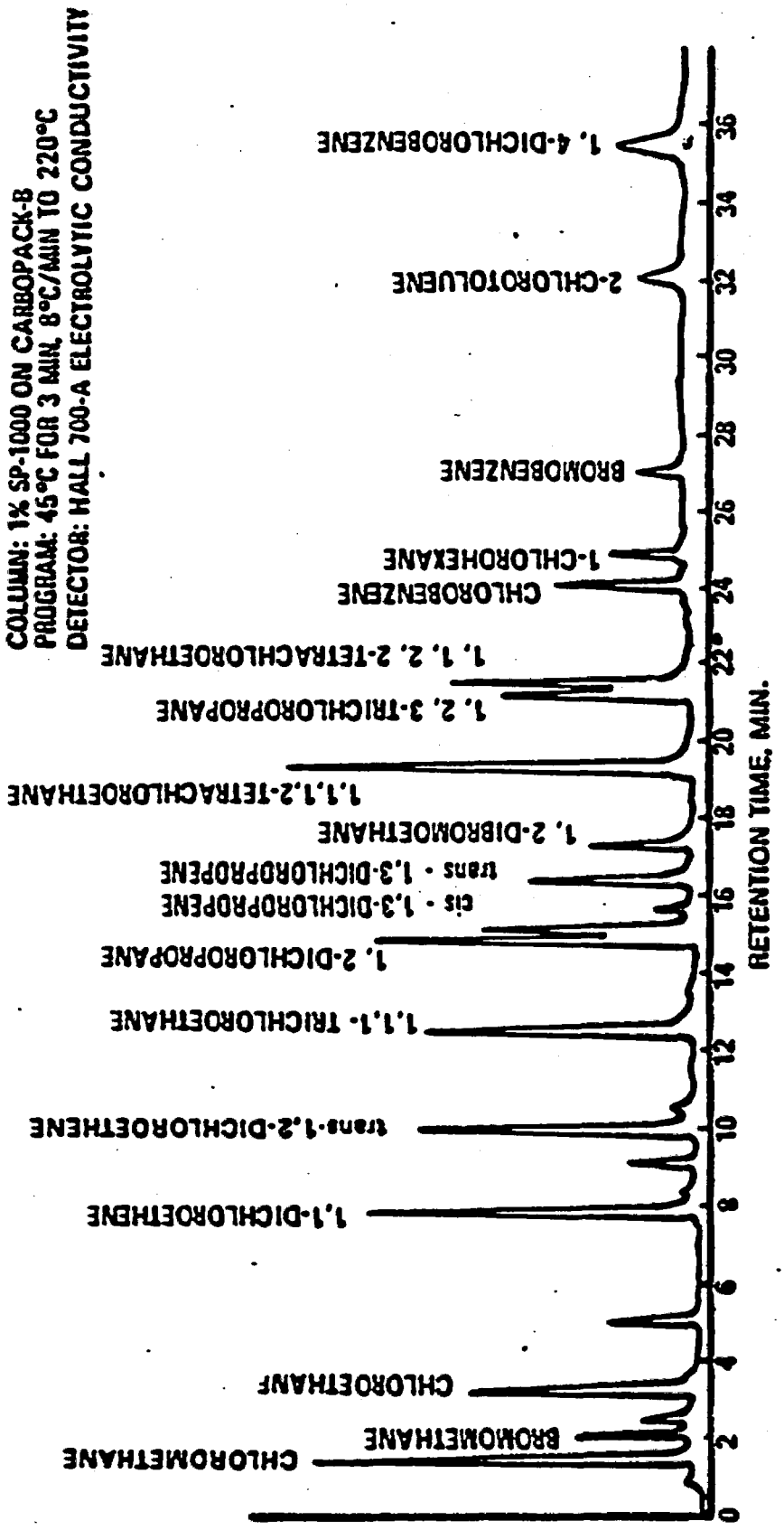

Figure 5. Gas chromatogram of purgeable halocarbons.

BILLING CODE 6560-50-C

AR301228

Method 602—Purgeable Aromatics

1. Scope and Application

1.1 This method covers the determination of various purgeable aromatics. The following parameters may be determined by this method:

Parameter	STORET No.	CAS No.
Benzene	34030	71-43-2
Chlorobenzene	34301	108-90-7
1,2-Dichlorobenzene	34536	95-50-1
1,3-Dichlorobenzene	34566	541-73-1
1,4-Dichlorobenzene	34571	106-46-7
Ethylbenzene	34371	100-41-4
Toluene	34010	108-88-3

1.2 This is a purge and trap gas chromatographic (GC) method applicable to the determination of the compounds listed above in municipal and industrial discharges as provided under 40 CFR 136.1. When this method is used to analyze unfamiliar samples for any or all of the compounds above, compound identifications should be supported by at least one additional qualitative technique. This method describes analytical conditions for a second gas chromatographic column that can be used to confirm measurements made with the primary column. Method 624 provides gas chromatograph/mass spectrometer (GC/MS) conditions appropriate for the qualitative and quantitative confirmation of results for all of the parameters listed above.

1.3 The method detection limit (MDL, defined in Section 12.1)[1] for each parameter listed in Table 1. The MDL for a specific wastewater may differ from those listed, depending upon the nature of interferences in the sample matrix.

1.4 Any modification of this method, beyond those expressly permitted, shall be considered as a major modification subject to application and approval of alternate test procedures under 40 CFR 136.4 and 136.5.

1.5 This method is restricted to use by or under the supervision of analysts experienced in the operation of a purge and trap system and a gas chromatograph and in the interpretation of gas chromatograms. Each analyst must demonstrate the ability to generate acceptable results with this method using the procedure described in Section 8.2.

2. Summary of Method

2.1 An inert gas is bubbled through a 5-mL water sample contained in a specially-designed purging chamber at ambient temperature. The aromatics are efficiently transferred from the aqueous phase to the vapor phase. The vapor is swept through a sorbent trap where the aromatics are trapped. After purging is completed, the trap is heated and backflushed with the inert gas to desorb the aromatics onto a gas chromatographic column. The gas chromatograph is temperature programmed to separate the aromatics which are then detected with a photoionization detector.[2,3]

2.2 The method provides an optional gas chromatographic column that may be helpful in resolving the compounds of interest from interferences that may occur.

3. Interferences

3.1 Impurities in the purge gas and organic compounds outgassing from the plumbing ahead of the trap account for the majority of contamination problems. The analytical system must be demonstrated to be free from contamination under the conditions of the analysis by running laboratory reagent blanks as described in Section 8.1.3. The use of non-Teflon plastic tubing, non-Teflon thread sealants, or flow controllers with rubber components in the purge and trap system should be avoided.

3.2 Samples can be contaminated by diffusion of volatile organics through the septum seal into the sample during shipment and storage. A field reagent blank prepared from reagent water and carried through the sampling and handling protocol can serve as a check on such contamination.

3.3 Contamination by carry-over can occur whenever high level and low level samples are sequentially analyzed. To reduce carry-over, the purging device and sample syringe must be rinsed with reagent water between sample analyses. Whenever an unusually concentrated sample is encountered, it should be followed by an analysis of reagent water to check for cross contamination. For samples containing large amounts of water-soluble materials, suspended solids, high boiling compounds or high aromatic levels, it may be necessary to wash the purging device with a detergent solution, rinse it with distilled water, and then dry it in an oven at 105 °C between analyses. The trap and other parts of the system are also subject to contamination; therefore, frequent bakeout and purging of the entire system may be required.

4. Safety

4.1 The toxicity or carcinogenicity of each reagent used in this method has not been precisely defined; however, each chemical compound should be treated as a potential health hazard. From this viewpoint, exposure to these chemicals must be reduced to the lowest possible level by whatever means available. The laboratory is responsible for maintaining a current awareness file of OSHA regulations regarding the safe handling of the chemicals specified in this method. A reference file of material data handling sheets should also be made available to all personnel involved in the chemical analysis. Additional references to laboratory safety are available and have been identified[4-6] for the information of the analyst.

4.2 The following parameters covered by this method have been tentatively classified as known or suspected, human or mammalian carcinogens: benzene and 1,4-dichlorobenzene. Primary standards of these toxic compounds should be prepared in a hood. A NIOSH/MESA approved toxic gas respirator should be worn when the analyst handles high concentrations of these toxic compounds.

5. Apparatus and Materials

5.1 Sampling equipment, for discrete sampling.

5.1.1 Vial—25-mL capacity or larger, equipped with a screw cap with a hole in the center (Pierce #13075 or equivalent). Detergent wash, rinse with tap and distilled water, and dry at 105 °C before use.

5.1.2 Septum—Teflon-faced silicone (Pierce #12722 or equivalent). Detergent wash, rinse with tap and distilled water, and dry at 105 °C for 1 h before use.

5.2 Purge and trap system—The purge and trap system consists of three separate pieces of equipment: A purging device, trap, and desorber. Several complete systems are now commercially available.

5.2.1 The purging device must be designed to accept 5-mL samples with a water column at least 3 cm deep. The gaseous head space between the water column and the trap must have a total volume of less than 15 mL. The purge gas must pass through the water column as finely divided bubbles with a diameter of less than 3 mm at the origin. The purge gas must be introduced no more than 5 mm from the base of the water column. The purging device illustrated in Figure 1 meets these design criteria.

5.2.2 The trap must be at least 25 cm long and have an inside diameter of at least 0.105 in.

5.2.2.1 The trap is packed with 1 cm of methyl silicone coated packing (Section 6.4.2) and 23 cm of 2,6-diphenylene oxide polymer (Section 6.4.1) as shown in Figure 2. This trap was used to develop the method performance statements in Section 12.

5.2.2.2 Alternatively, either of the two traps described in Method 601 may be used, although water vapor will preclude the measurement of low concentrations of benzene.

5.2.3 The desorber must be capable of rapidly heating the trap to 180 °C. The polymer section of the trap should not be heated higher than 180 °C and the remaining sections should not exceed 200 °C. The desorber illustrated in Figure 2 meets these design criteria.

5.2.4 The purge and trap system may be assembled as a separate unit or be coupled to a gas chromatograph as illustrated in Figures 3, 4, and 5.

5.3 Gas chromatograph—An analytical system complete with a temperature programmable gas chromatograph suitable for on-column injection and all required accessories including syringes, analytical columns, gases, detector, and strip-chart recorder. A data system is recommended for measuring peak areas.

5.3.1 Column 1—6 ft long x 0.082 in. ID stainless steel or glass, packed with 5% SP-1200 and 1.75% Bentone-34 on Supelcoport (100/120 mesh) or equivalent. This column was used to develop the method performance statements in Section 12. Guidelines for the use of alternate column packings are provided in Section 10.1.

5.3.2 Column 2—6 ft long x 0.1 in ID stainless steel or glass, packed with 5% 1,2,3-Tris(2-cyanoethoxy)propane on Chromosorb W-AW (60/80 mesh) or equivalent.

5.3.3 Detector—Photoionization detector (h-Nu Systems, Inc. Model PI-51-02 or equivalent). This type of detector has been proven effective in the analysis of wastewaters for the parameters listed in the scope (Section 1.1), and was used to develop

P 201229

the method performance statements in Section 12. Guidelines for the use of alternate detectors are provided in Section 10.1.

5.4 Syringes—5-mL glass hypodermic with Luerlok tip (two each), if applicable to the purging device.

5.5 Micro syringes—25-µL, 0.006 in. ID needle.

5.6 Syringe valve—2-way, with Luer ends (three each).

5.7 Bottle—15-mL, screw-cap, with Teflon cap liner.

5.8 Balance—Analytical, capable of accurately weighing 0.0001 g.

6. Reagents

6.1 Reagent water—Reagent water is defined as a water in which an interferent is not observed at the MDL of the parameters of interest.

6.1.1 Reagent water can be generated by passing tap water through a carbon filter bed containing about 1 lb of activated carbon (Filtrasorb-300, Calgon Corp., or equivalent).

6.1.2 A water purification system (Millipore Super-Q or equivalent) may be used to generate reagent water.

6.1.3 Reagent water may also be prepared by boiling water for 15 min. Subsequently, while maintaining the temperature at 90 °C, bubble a contaminant-free inert gas through the water for 1 h. While still hot, transfer the water to a narrow mouth screw-cap bottle and seal with a Teflon-lined septum and cap.

6.2 Sodium thiosulfate—(ACS) Granular.

6.3 Hydrochloric acid (1+1)—Add 50 mL of concentrated HCl (ACS) to 50 mL of reagent water.

6.4 Trap Materials:

6.4.1 2,6-Diphenylene oxide polymer—Tenax, (60/80 mesh), chromatographic grade or equivalent.

6.4.2 Methyl silicone packing—3% OV-1 on Chromosorb-W (60/80 mesh) or equivalent.

6.5 Methanol—Pesticide quality or equivalent.

6.6 Stock standard solutions—Stock standard solutions may be prepared from pure standard materials or purchased as certified solutions. Prepare stock standard solutions in methanol using assayed liquids. Because of the toxicity of benzene and 1,4-dichlorobenzene, primary dilutions of these materials should be prepared in a hood. A NIOSH/MESA approved toxic gas respirator should be used when the analyst handles high concentrations of such materials.

6.6.1 Place about 9.8 mL of methanol into a 10-mL ground glass stoppered volumetric flask. Allow the flask to stand, unstoppered, for about 10 min or until all alcohol wetted surfaces have dried. Weigh the flask to the nearest 0.1 mg.

6.6.2 Using a 100-µL syringe, immediately add two or more drops of assayed reference material to the flask, then reweigh. Be sure that the drops fall directly into the alcohol without contacting the neck of the flask.

6.6.3 Reweigh, dilute to volume, stopper, then mix by inverting the flask several times. Calculate the concentration in µg/µL from the net gain in weight. When compound purity is assayed to be 96% or greater, the weight can be used without correction to calculate the concentration of the stock standard. Commercially prepared stock standards can be used at any concentration if they are certified by the manufacturer or by an independent source.

6.6.4 Transfer the stock standard solution into a Teflon-sealed screw-cap bottle. Store at 4 °C and protect from light.

6.6.5 All standards must be replaced after one month, or sooner if comparison with check standards indicates a problem.

6.7 Secondary dilution standards—Using stock standard solutions, prepare secondary dilution standards in methanol that contain the compounds of interest, either singly or mixed together. The secondary dilution standards should be prepared at concentrations such that the aqueous calibration standards prepared in Sections 7.3.1 or 7.4.1 will bracket the working range of the analytical system. Secondary solution standards must be stored with zero headspace and should be checked frequently for signs of degradation or evaporation, especially just prior to preparing calibration standards from them.

6.8 Quality control check sample concentrate—See Section 8.2.1.

7. Calibration

7.1 Assemble a purge and trap system that meets the specifications in Section 5.2. Condition the trap overnight at 180 °C by backflushing with an inert gas flow of at least 20 mL/min. Condition the trap for 10 min once daily prior to use.

7.2 Connect the purge and trap system to a gas chromatograph. The gas chromatograph must be operated using temperature and flow rate conditions equivalent to those given in Table 1. Calibrate the purge and trap-gas chromatographic system using either the external standard technique (Section 7.3) or the internal standard technique (Section 7.4).

7.3 External standard calibration procedure:

7.3.1 Prepare calibration standards at a minimum of three concentration levels for each parameter by carefully adding 20.0 µL of one or more secondary dilution standards to 100, 500, or 1000 mL of reagent water. A 25-µL syringe with a 0.006 in. ID needle should be used for this operation. One of the external standards should be at a concentration near, but above, the MDL (Table 1) and the other concentrations should correspond to the expected range of concentrations found in real samples or should define the working range of the detector. These aqueous standards must be prepared fresh daily.

7.3.2 Analyze each calibration standard according to Section 10, and tabulate peak height or area responses versus the concentration in the standard. The results can be used to prepare a calibration curve for each compound. Alternatively, if the ratio of response to concentration (calibration factor) is a constant over the working range (<10% relative standard deviation, RSD), linearity through the origin can be assumed and the average ratio or calibration factor can be used in place of a calibration curve.

7.4 Internal standard calibration procedure—To use this approach, the analyst must select one or more internal standards that are similar in analytical behavior to the compounds of interest. The analyst must further demonstrate that the measurement of the internal standard is not affected by method or matrix interferences. Because of these limitations, no internal standard can be suggested that is applicable to all samples. The compound, α,α,α,-trifluorotoluene, recommended as a surrogate spiking compound in Section 8.7 has been used successfully as an internal standard.

7.4.1 Prepare calibration standards at a minimum of three concentration levels for each parameter of interest as described in Section 7.3.1.

7.4.2 Prepare a spiking solution containing each of the internal standards using the procedures described in Section 6.6 and 6.7. It is recommended that the secondary dilution standard be prepared at a concentration of 15 µg/mL of each internal standard compound. The addition of 10 µl of this standard to 5.0 mL of sample or calibration standard would be equivalent to 30 µg/L.

7.4.3 Analyze each calibration standard according to Section 10, adding 10 µL of internal standard spiking solution directly to the syringe (Section 10.4). Tabulate peak height or area responses against concentration for each compound and internal standard, and calculate response factors (RF) for each compound using Equation 1.

Equation 1.

$$RF = \frac{(A_s)(C_{is})}{(A_{is})(C_s)}$$

where:

A_s = Response for the parameter to be measured.

A_{is} = Response for the internal standard.

C_{is} = Concentration of the internal standard

C_s = Concentration of the parameter to be measured.

If the RF value over the working range is a constant (<10% RSD), the RF can be assumed to be invariant and the average RF can be used for calculations. Alternatively, the results can be used to plot a calibration curve of response ratios, A_s/A_{is} vs. RF.

7.5 The working calibration curve, calibration factor, or RF must be verified on each working day by the measurement of a QC check sample.

7.5.1 Prepare the QC check sample as described in Section 8.2.2.

7.5.2 Analyze the QC check sample according to Section 10.

7.5.3 For each parameter, compare the response (Q) with the corresponding calibration acceptance criteria found in Table 2. If the responses for all parameters of interest fall within the designated ranges, analysis of actual samples can begin. If any individual Q falls outside the range, a new calibration curve, calibration factor, or RF must be prepared for that parameter according to Section 7.3 or 7.4.

8. Quality Control

AR301230

8.1 Each laboratory that uses this method is required to operate a formal quality control program. The minimum requirements of this program consist of an initial demonstration of

laboratory capability and an ongoing analysis of spiked samples to evaluate and document data quality. The laboratory must maintain records to document the quality of data that is generated. Ongoing data quality checks are compared with established performance criteria to determine if the results of analyses meet the performance characteristics of the method. When results of sample spikes indicate atypical method performance, a quality control check standard must be analyzed to confirm that the measurements were performed in an in-control mode of operation.

8.1.1 The analyst must make an initial, one-time, demonstration of the ability to generate acceptable accuracy and precision with this method. This ability is established as described in Section 8.2.

8.1.2 In recognition of advances that are occurring in chromatography, the analyst is permitted certain options (detailed in Section 10.1) to improve the separations or lower the cost of measurements. Each time such a modification is made to the method, the analyst is required to repeat the procedure in Section 8.2.

8.1.3 Each day, the analyst must analyze a reagent water blank to demonstrate that interferences from the analytical system are under control.

8.1.4 The laboratory must, on an ongoing basis, spike and analyze a minimum of 10% of all samples to monitor and evaluate laboratory data quality. This procedure is described in Section 8.3.

8.1.5 The laboratory must, on an ongoing basis, demonstrate through the analyses of quality control check standards that the operation of the measurement system is in control. This procedure is described in Section 8.4. The frequency of the check standard analyses is equivalent to 10% of all samples analyzed but may be reduced if spike recoveries from samples (Section 8.3) meet all specified quality control criteria.

8.1.6 The laboratory must maintain performance records to document the quality of data that is generated. This procedure is described in Section 8.5.

8.2 To establish the ability to generate acceptable accuracy and precision, the analyst must perform the following operations.

8.2.1 A quality control (QC) check sample concentrate is required containing each parameter of interest at a concentration of 10 µg/mL in methanol. The QC check sample concentrate must be obtained from the U.S. Environmental Protection Agency, Environmental Monitoring and Support Laboratory in Cincinnati, Ohio, if available. If not available from that source, the QC check sample concentrate must be obtained from another external source. If not available from either source above, the QC check sample concentrate must be prepared by the laboratory using stock standards prepared independently from those used for calibration.

8.2.2 Prepare a QC check sample to contain 20 µg/L of each parameter by adding 200 µL of QC check sample concentrate to 100 mL of reagent water.

8.2.3 Analyze four 5-mL aliquots of the well-mixed QC check sample according to Section 10.

8.2.4 Calculate the average recovery ($\bar{X}$) in µg/L, and the standard deviation of the recovery (s) in µg/L, for each parameter of interest using the four results.

8.2.5 For each parameter compare s and $\bar{X}$ with the corresponding acceptance criteria for precision and accuracy, respectively, found in Table 2. If s and $\bar{X}$ for all parameters of interest meet the acceptance criteria, the system performance is acceptable and analysis of actual samples can begin. If any individual s exceeds the precision limit or any individual $\bar{X}$ falls outside the range for accuracy, the system performance is unacceptable for that parameter.

Note.—The large number of parameters in Table 2 present a substantial probability that one or more will fail at least one of the acceptance criteria when all parameters are analyzed.

8.2.6 When one or more of the parameters tested fail at least one of the acceptance criteria, the analyst must proceed according to Section 8.2.6.1 or 8.2.6.2.

8.2.6.1 Locate and correct the source of the problem and repeat the test for all parameters of interest beginning with Section 8.2.3.

8.2.6.2 Beginning with Section 8.2.3, repeat the test only for those parameters that failed to meet criteria. Repeated failure, however, will confirm a general problem with the measurement system. If this occurs, locate and correct the source of the problem and repeat the test for all compounds of interest beginning with Section 8.2.3.

8.3 The laboratory must, on an ongoing basis, spike at least 10% of the samples from each sample site being monitored to assess accuracy. For laboratories analyzing one to ten samples per month, at least one spiked sample per month is required.

8.3.1 The concentration of the spike in the sample should be determined as follows:

8.3.1.1 If, as in compliance monitoring, the concentration of a specific parameter in the sample is being checked against a regulatory concentration limit, the spike should be at that limit or 1 to 5 times higher than the background concentration determined in Section 8.3.2, whichever concentration would be larger.

8.3.1.2 If the concentration of a specific parameter in the sample is not being checked against a limit specific to that parameter, the spike should be at 20 µg/L or 1 to 5 times higher than the background concentration determined in Section 8.3.2, whichever concentration would be larger.

8.3.2 Analyze one 5-mL sample aliquot to determine the background concentration (B) of each parameter. If necessary, prepare a new QC check sample concentrate (Section 8.2.1) appropriate for the background concentrations in the sample. Spike a second 5-mL sample aliquot with 10 µL of the QC check sample concentrate and analyze it to determine the concentration after spiking (A) of each parameter. Calculate each percent recovery (P) as 100(A–B)%/T, where T is the known true value of the spike.

8.3.3 Compare the percent recovery (P) for each parameter with the corresponding QC acceptance criteria found in Table 2. These acceptance criteria were calculated to include an allowance for error in measurement of both the background and spike concentrations, assuming a spike to background ratio of 5:1. This error will be accounted for to the extent that the analyst's spike to background ratio approaches 5:1.[7] If spiking was performed at a concentration lower than 20 µg/L, the analyst must use either the QC acceptance criteria in Table 2, or optional QC acceptance criteria calculated for the specific spike concentration. To calculate optional acceptance criteria for the recovery of a parameter: (1) Calculate accuracy (X') using the equation in Table 3, substituting the spike concentration (T) for C; (2) calculate overall precision (S') using the equation in Table 3, substituting X' for $\bar{X}$; (3) calculate the range for recovery at the spike concentration as (100 X'/T) ± 2.44(100 S'/T)%.[7]

8.3.4 If any individual P falls outside the designated range for recovery, that parameter has failed the acceptance criteria. A check standard containing each parameter that failed the criteria must be analyzed as described in Section 8.4.

8.4 If any parameter fails the acceptance criteria for recovery in Section 8.3, a QC check standard containing each parameter that failed must be prepared and analyzed.

Note: The frequency for the required analysis of a QC check standard will depend upon the number of parameters being simultaneously tested, the complexity of the sample matrix, and the performance of the laboratory.

8.4.1 Prepare the QC check standard by adding 10 µL of QC check sample concentrate (Sections 8.2.1 or 8.3.2) to 5 mL of reagent water. The QC check standard needs only to contain the parameters that failed criteria in the test in Section 8.3.

8.4.2 Analyze the QC check standard to determine the concentration measured (A) of each parameter. Calculate each percent recovery (P_s) as 100 (A/T)%, where T is the true value of the standard concentration.

8.4.3 Compare the percent recovery (P_s) for each parameter with the corresponding QC acceptance criteria found in Table 2. Only parameters that failed the test in Section 8.3 need to be compared with these criteria. If the recovery of any such parameter falls outside the designated range, the laboratory performance for that parameter is judged to be out of control, and the problem must be immediately identified and corrected. The analytical result for that parameter in the unspiked sample is suspect and may not be reported for regulatory compliance purposes.

8.5 As part of the QC program for the laboratory, method accuracy for wastewater samples must be assessed and records must be maintained. After the analysis of five spiked wastewater samples as in Section 8.3, calculate the average percent recovery ($\bar{P}$) and the standard deviation of the percent recovery (s_p). Express the accuracy assessment as a percent recovery interval, from $\bar{P}-2s_p$ to $\bar{P}+2s_p$. If $\bar{P}$ = 90% and s_p = 10%, for example, the accuracy interval is expressed as 70–110%. Update the accuracy assessment for each parameter on a regular basis (e.g. after each five to ten new accuracy measurements).

AR 301231

8.6 It is recommended that the laboratory adopt additional quality assurance practices for use with this method. The specific practices that are most productive depend upon the needs of the laboratory and the nature of the samples. Field duplicates may be analyzed to assess the precision of the environmental measurements. When doubt exists over the identification of a peak on the chromatogram, confirmatory techniques such as gas chromatography with a dissimilar column, specific element detector, or mass spectrometer must be used. Whenever possible, the laboratory should analyze standard reference materials and participate in relevant performance evaluation studies.

8.7 The analyst should monitor both the performance of the analytical system and the effectiveness of the method in dealing with each sample matrix by spiking each sample, standard, and reagent water blank with surrogate compounds (e.g. α, α, α,-trifluorotoluene) recommended to encompass the range of the temperature program used in this method. From stock standard solutions prepared as in Section 5.8, add a volume to give 750 μg of each surrogate to 45 mL of reagent water contained in a 50-mL volumetric flask, mix and dilute to volume for a concentration of 15 mg/μL. Add 10 μL of this surrogate spiking solution directly into the 5-mL syringe with every sample and reference standard analyzed. Prepare a fresh surrogate spiking solution on a weekly basis. If the internal standard calibration procedure is being used, the surrogate compounds may be added directly to the internal standard spiking solution (Section 7.4.2).

9. Sample Collection, Preservation, and Handling

9.1 The samples must be iced or refrigerated from the time of collection until analysis. If the sample contains free or combined chlorine, add sodium thiosulfate preservative (10 mg/40 mL is sufficient for up to 5 ppm Cl_2) to the empty sample bottle just prior to shipping to the sampling site. EPA Method 330.4 or 330.5 may be used for measurement of residual chlorine.[6] Field test kits are available for this purpose.

9.2 Collect about 500 mL of sample in a clean container. Adjust the pH of the sample to about 2 by adding 1+1 HCl while stirring. Fill the sample bottle in such a manner that no air bubbles pass through the sample as the bottle is being filled. Seal the bottle so that no air bubbles are entrapped in it. Maintain the hermetic seal on the sample bottle until time of analysis.

9.3 All samples must be analyzed within 14 days of collection.[5]

10. Procedure

10.1 Table 1 summarizes the recommended operating conditions for the gas chromatograph. Included in this table are estimated retention times and MDL that can be achieved under these conditions. An example of the separations achieved by Column 1 is shown in Figure 6. Other packed columns, chromatographic conditions, or detectors may be used if the requirements of Section 8.2 are met.

10.2 Calibrate the system daily as described in Section 7.

10.3 Adjust the purge gas (nitrogen or helium) flow rate to 40 mL/min. Attach the trap inlet to the purging device, and set the purge and trap system to purge (Figure 3). Open the syringe valve located on the purging device sample introduction needle.

10.4 Allow the sample to come to ambient temperature prior to introducing it to the syringe. Remove the plunger from a 5-mL syringe and attach a closed syringe valve. Open the sample bottle (or standard) and carefully pour the sample into the syringe barrel to just short of overflowing. Replace the syringe plunger and compress the sample. Open the syringe valve and vent any residual air while adjusting the sample volume to 5.0 mL. Since this process of taking an aliquot destroys the validity of the sample for future analysis, the analyst should fill a second syringe at this time to protect against possible loss of data. Add 10.0 μL of the surrogate spiking solution (Section 8.7) and 10.0 μL of the internal standard spiking solution (Section 7.4.2), if applicable, through the valve bore, then close the valve.

10.5 Attach the syringe-syringe valve assembly to the syringe valve on the purging device. Open the syringe valves and inject the sample into the purging chamber.

10.6 Close both valves and purge the sample for 12.0±0.1 min at ambient temperature.

10.7 After the 12-min purge time, disconnect the purging device from the trap. Dry the trap by maintaining a flow of 40 mL/min of dry purge gas through it for 6 min (Figure 4). If the purging device has no provision for bypassing the purger for this step, a dry purger should be inserted into the device to minimize moisture in the gas. Attach the trap to the chromatograph, adjust the purge and trap system to the desorb mode (Figure 5), and begin to temperature program the gas chromatograph. Introduce the trapped materials to the GC column by rapidly heating the trap to 180 °C while backflushing the trap with an inert gas between 20 and 60 mL/min for 4 min. If rapid heating of the trap cannot be achieved, the GC column must be used as a secondary trap by cooling it to 30 °C (subambient temperature, if poor peak geometry and random retention time problems persist) instead of the initial program temperature of 50 °C.

10.8 While the trap is being desorbed into the gas chromatograph column, empty the purging chamber using the sample introduction syringe. Wash the chamber with two 5-mL flushes of reagent water.

10.9 After desorbing the sample for 4 min, recondition the trap by returning the purge and trap system to the purge mode. Wait 15 s, then close the syringe valve on the purging device to begin gas flow through the trap. The trap temperature should be maintained at 180 °C. After approximately 7 min, turn off the trap heater and open the syringe valve to stop the gas flow through the trap. When the trap is cool, the next sample can be analyzed.

10.10 Identify the parameters in the sample by comparing the retention times of the peaks in the sample chromatogram with those of the peaks in standard chromatograms. The width of the retention time window used to make identifications should be based upon measurements of actual retention time variations of standards over the course of a day. Three times the standard deviation of a retention time for a compound can be used to calculate a suggested window size; however, the experience of the analyst should weigh heavily in the interpretation of chromatograms.

10.11 If the response for a peak exceeds the working range of the system, prepare a dilution of the sample with reagent water from the aliquot in the second syringe and reanalyze.

11. Calculations

11.1 Determine the concentration of individual compounds in the sample.

11.1.1 If the external standard calibration procedure is used, calculate the concentration of the parameter being measured from the peak response using the calibration curve or calibration factor determined in Section 7.3.2.

11.1.2 If the internal standard calibration procedure is used, calculate the concentration in the sample using the response factor (RF) determined in Section 7.4.3 and Equation 2.

Equation 2.

$$\text{Concentration } (\mu g/L) = \frac{(A_s)(C_{is})}{(A_{is})(RF)}$$

where:

A_s = Response for the parameter to be measured.

A_{is} = Response for the internal standard.

C_{is} = Concentration of the internal standard.

11.2 Report results in μg/L without correction for recovery data. All QC data obtained should be reported with the sample results.

12. Method Performance

12.1 The method detection limit (MDL) is defined as the minimum concentration of a substance that can be measured and reported with 99% confidence that the value is above zero.[7] The MDL concentrations listed in Table 1 were obtained using reagent water.[8] Similar results were achieved using representative wastewaters. The MDL actually achieved in a given analysis will vary depending on instrument sensitivity and matrix effects.

12.2 This method has been demonstrated to be applicable for the concentration range from the MDL to 1000 X MDL.[8] Direct aqueous injection techniques should be used to measure concentration levels above 1000 x MDL.

12.3 This method was tested by 20 laboratories using reagent water, drinking water, surface water, and three industrial wastewaters spiked at six concentrations over the range 2.1 to 189 μg/L. Single operator precision, overall precision, and method accuracy were found to be directly related to the concentration of the parameter and essentially independent of the sample

AR 301232

matrix. Linear equations to describe these relationships are presented in Table 3.

References

1. 40 CFR Part 136, Appendix B.
2. Bellar, T.A., and Lichtenberg, J.J. *Journal American Water Works Association*, 66, 739 (1974).
3. Bellar, T.A., and Lichtenberg, J.J. "Semi-Automated Headspace Analysis of Drinking Waters and Industrial Waters for Purgeable Volatile Organic Compounds." Proceedings of Symposium on Measurement of Organic Pollutants in Water and Wastewater. American Society for Testing and Materials, STP 686, C.E. Van Hall, editor, 1978.
4. "Carcinogens—Working with Carcinogens." Department of Health, Education, and Welfare, Public Health Service, Center for Disease Control, National Institute for Occupational Safety and Health, Publication No. 77-206, August 1977.
5. "OSHA Safety and Health Standards, General Industry," (29 CFR 1910), Occupational Safety and Health Administration, OSHA 2206 (Revised, January 1976).
6. "Safety in Academic Chemistry Laboratories," American Chemical Society Publication, Committee on Safety, 3rd Edition, 1979.
7. Provost, L.P., and Elder, R.S. "Interpretation of Percent Recovery Data." *American Laboratory*, 15, 58-63 (1983). (The value 2.44 used in the equation in Section 8.3.3. is two times the value 1.22 derived in this report.)
8. "Methods 330.4 (Titrimetric, DPD-FAS) and 330.5 (Spectrophotometric, DPD) for Chlorine, Total Residual." Methods for Chemical Analysis of Water and Wastes. EPA-600/4-79-020. U.S. Environmental Protection Agency, Office of Research and Development, Environmental Monitoring and Support Laboratory, Cincinnati, Ohio 45268. March 1979.
9. "EPA Method Validation Study 24, Method 602 (Purgeable Aromatics)." Report for EPA Contract 68-03-2856 (In preparation).

TABLE 1.—CHROMATOGRAPHIC CONDITIONS AND METHOD DETECTION LIMITS

Parameter	Retention time (min)		Method detection limit (µg/L)
	Column 1	Column 2	
Benzene	3.33	2.75	0.2
Toluene	5.75	4.25	0.2
Ethylbenzene	8.25	8.25	0.2
Chlorobenzene	8.17	8.02	0.2
1,4-Dichlorobenzene	16.8	16.2	0.3
1,3-Dichlorobenzene	16.2	15.0	0.4
1,2-Dichlorobenzene	25.8	18.4	0.4

Column 1 conditions: Supelcoport (100/120 mesh) coated with 5% SP-1200/1.75% Bentone-34 packed in a 6 ft x 0.085 in. ID stainless steel column with helium carrier gas at 36 mL/min flow rate. Column temperature held at 50 °C for 2 min then programmed at 6 °C/min to 80 °C for a final hold.

Column 2 conditions: Chromosorb W-AW (60/80 mesh) coated with 5% 1,2,3-Tris(2-cyanoethoxy)propane packed in a 6 ft x 0.085 in. ID stainless steel column with helium carrier gas at 30 mL/min flow rate. Column temperature held at 40 °C for 2 min then programmed at 2 °C/min to 100 °C for a final hold.

TABLE 2.—CALIBRATION AND QC ACCEPTANCE CRITERIA—METHOD 602 [a]

Parameter	Range for Q (µg/L)	Limit for s (µg/L)	Range for $\bar{X}$ (µg/L)	Range for P_s, P_o (%)
Benzene	15.4-24.6	4.1	10.0-27.8	39-150
Chlorobenzene	16.1-23.8	3.5	12.7-25.4	65-135
1,2-Dichlorobenzene	13.6-26.4	5.8	10.6-27.6	37-154
1,3-Dichlorobenzene	14.5-25.5	5.0	12.8-25.5	50-141
1,4-Dichlorobenzene	13.9-26.1	5.5	11.8-25.6	42-143
Ethylbenzene	12.6-27.4	6.7	10.0-28.2	32-160
Toluene	15.5-24.5	4.0	11.2-27.7	46-148

Q = Concentration measured in QC check sample, in µg/L (Section 7.5.3).
s = Standard deviation of four recovery measurements, in µg/L (Section 8.2.4).
$\bar{X}$ = Average recovery for four recovery measurements, in µg/L (Section 8.2.4).
P_s, P_o = Percent recovery measured (Section 8.3.2, Section 8.4.2).
[a] Criteria were calculated assuming a QC check sample concentration of 20 µg/L.

Note: These criteria are based directly upon the method performance data in Table 3. Where necessary, the limits for recovery have been broadened to assure applicability of the limits to concentrations below those used to develop Table 3.

TABLE 3.—METHOD ACCURACY AND PRECISION AS FUNCTIONS OF CONCENTRATION—METHOD 602

Parameter	Accuracy, as recovery, X' (µg/L)	Single analyst precision, s' (µg/L)	Overall precision, S' (µg/L)
Benzene	0.92C+0.57	0.08$\bar{X}$+0.58	0.21$\bar{X}$+0.56
Chlorobenzene	0.95C+0.02	0.09$\bar{X}$+0.23	0.17$\bar{X}$+0.10
1,2-Dichlorobenzene	0.93C+0.52	0.17$\bar{X}$−0.04	0.22$\bar{X}$+0.53
1,3-Dichlorobenzene	0.96C−0.04	0.15$\bar{X}$−0.10	0.19$\bar{X}$+0.09
1,4-Dichlorobenzene	0.93C+0.09	0.15$\bar{X}$+0.28	0.20$\bar{X}$+0.41
Ethylbenzene	0.94C+0.31	0.17$\bar{X}$+0.46	0.26$\bar{X}$+0.23
Toluene	0.94C+0.65	0.09$\bar{X}$+0.49	0.18$\bar{X}$+0.71

X' = Expected recovery for one or more measurements of a sample containing a concentration of C, in µg/L.
s' = Expected single analyst standard deviation of measurements at an average concentration found of $\bar{X}$, in µg/L.
S' = Expected interlaboratory standard deviation of measurements at an average concentration found of $\bar{X}$, in µg/L.
C = True value for the Concentration, in µg/L.
$\bar{X}$ = Average recovery found for measurements of samples containing a concentration of C, in µg/L.

BILLING CODE 6560-50-M

AR301233

A

METHOD DETECTION LIMITS

602

Table 1. Chromatographic Conditions and Method Detection Limits

Parameter	Retention Time (min.) Column 1	Retention Time (min.) Column 2	Method Detection Limit µg/L
Benzene	3.33	2.75	0.2
Toluene	5.75	4.25	0.2
Ethylbenzene	8.25	6.25	0.2
Chlorobenzene	9.17	8.02	0.2
1,4-Dichlorobenzene	16.8	16.2	0.3
1,3-Dichlorobenzene	18.2	15.0	0.4
1,2-Dichlorobenzene	25.9	19.4	0.4

Column 1 conditions: Supelcoport 100/120 mesh coated with 5% SP-1200 and 1.75% Bentone-34 packed in a 6 ft. × 0.085 in ID stainless steel column with helium carrier gas at 36 cc/min flow rate. Column temperature held at 50°C for 2 min. then programmed at 6°C/min to 90°C for a final hold.

Column 2 conditions: Chromosorb W-AW 60/80 mesh coated with 5% 1,2,3-Tris(2-cyanoethyoxy)propane packed in a 6 ft. × 0.085 in ID stainless steel column with helium carrier gas at 30 cc/min flow rate. Column temperature held at 40°C for 2 min then programmed at 2°C/min to 100°C for a final hold.

B

PRECISION DESIRED

602

TABLE 3.—METHOD ACCURACY AND PRECISION AS FUNCTIONS OF CONCENTRATION—METHOD 602

Parameter	Accuracy, as recovery, X' (µg/L)	Single analyst precision, s' (µg/L)	Overall precision, S' (µg/L)
Benzene	0.92C+0.57	0.08$\bar{X}$+0.58	0.21$\bar{X}$+0.58
Chlorobenzene	0.95C+0.02	0.06$\bar{X}$+0.23	0.17$\bar{X}$+0.10
1,2-Dichlorobenzene	0.93C+0.52	0.17$\bar{X}$−0.04	0.22$\bar{X}$+0.63
1,3-Dichlorobenzene	0.96C−0.04	0.15$\bar{X}$−0.10	0.19$\bar{X}$+0.09
1,4-Dichlorobenzene	0.93C+0.09	0.15$\bar{X}$+0.28	0.20$\bar{X}$+0.41
Ethylbenzene	0.94C+0.31	0.17$\bar{X}$+0.48	0.26$\bar{X}$+0.23
Toluene	0.94C+0.66	0.08$\bar{X}$+0.49	0.18$\bar{X}$+0.71

X' = Expected recovery for one or more measurements of a sample containing a concentration of C, in µg/L.
s' = Expected single analyst standard deviation of measurements at an average concentration found of $\bar{X}$, in µg/L.
S' = Expected interlaboratory standard deviation of measurements at an average concentration found of $\bar{X}$, in µg/L.
C = True value for the Concentration, in µg/L.
$\bar{X}$ = Average recovery found for measurements of samples containing a concentration of C, in µg/L.

AR301235

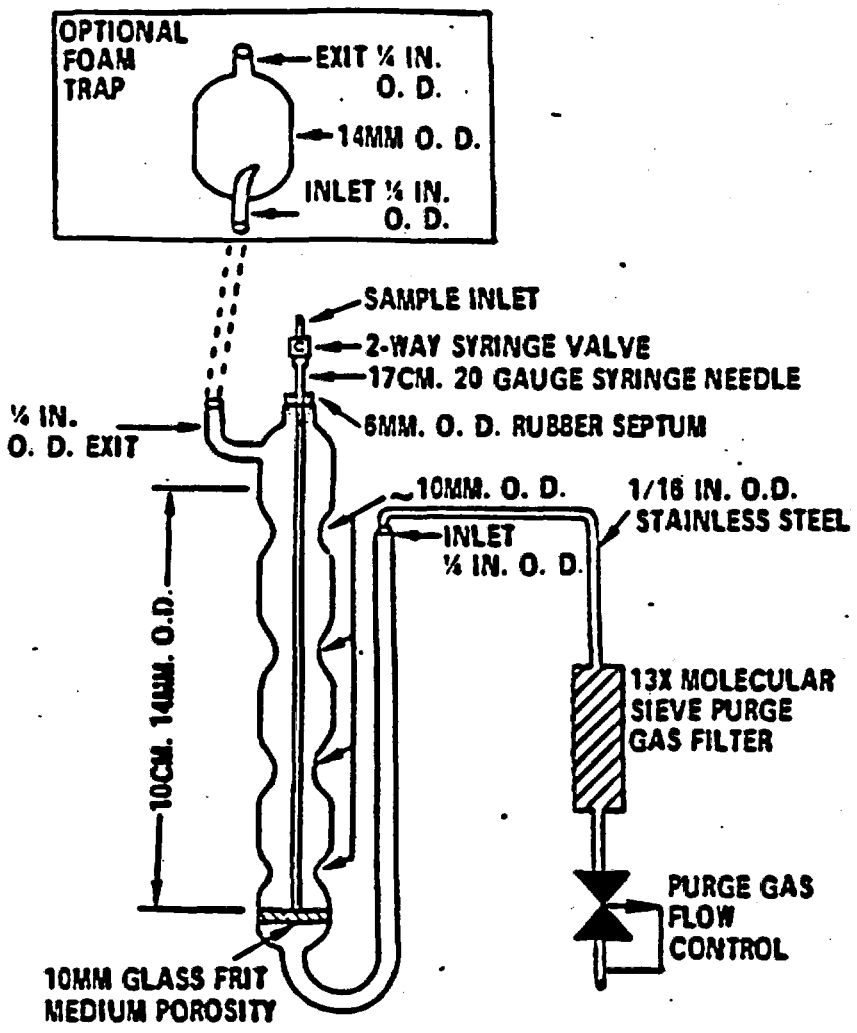

Figure 1. Purging device.

AR301236

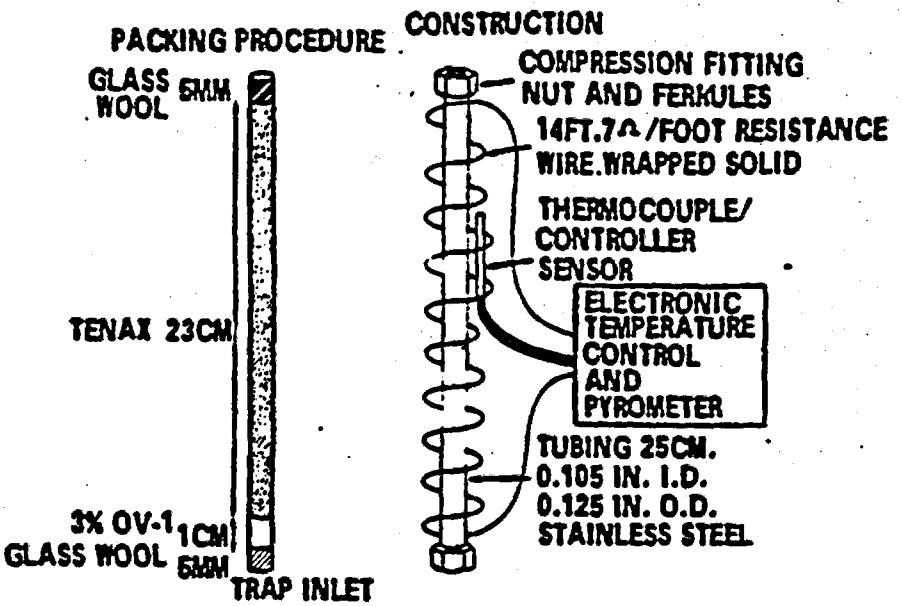

Figure 2. Trap packings and construction to include desorb capability.

AR301237

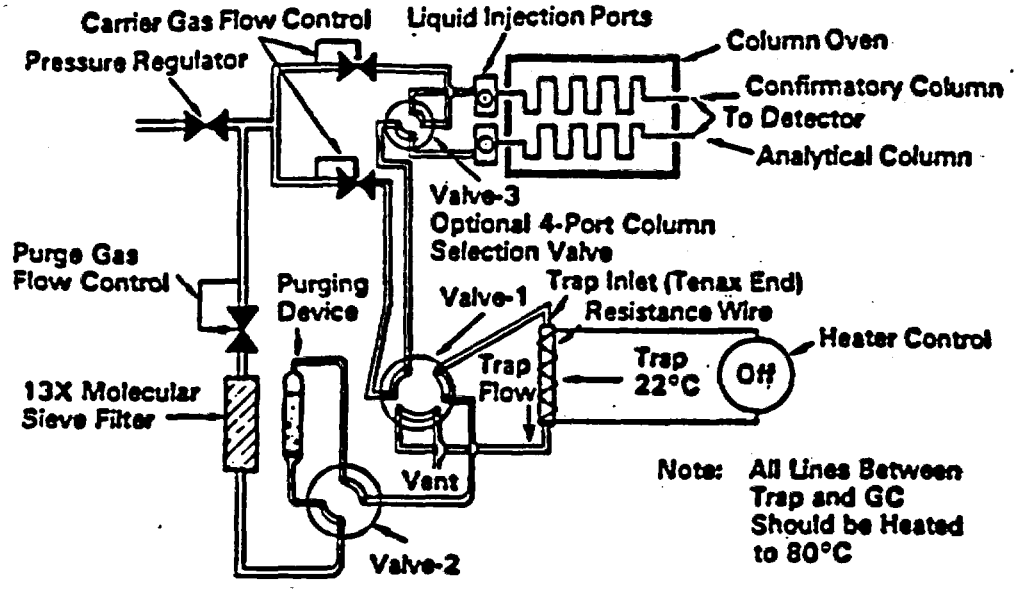

Figure 3. Purge and trap system - purge mode.

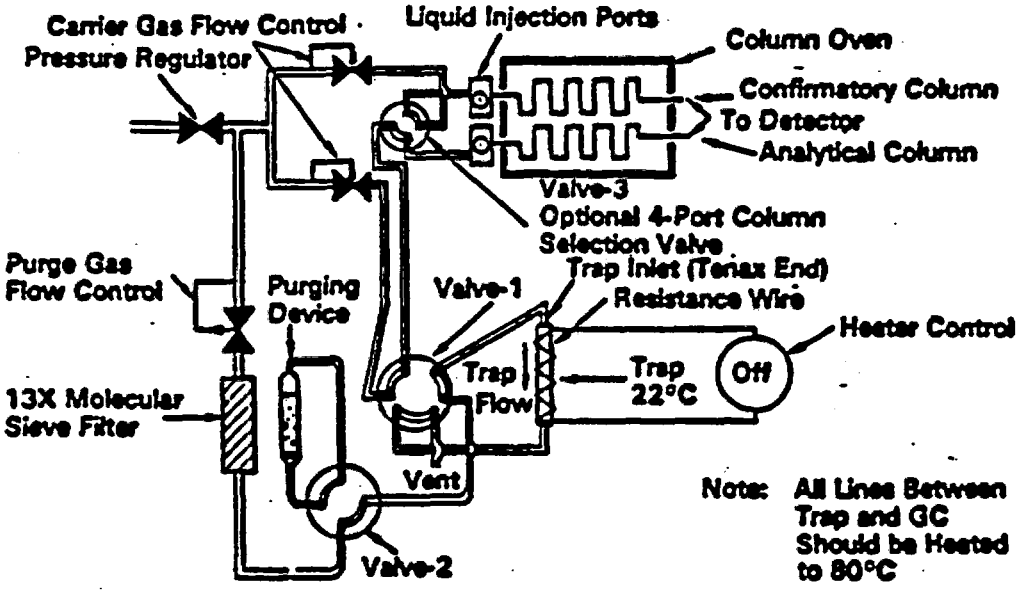

Figure 4. Purge and trap system-dry mode.

AR301238

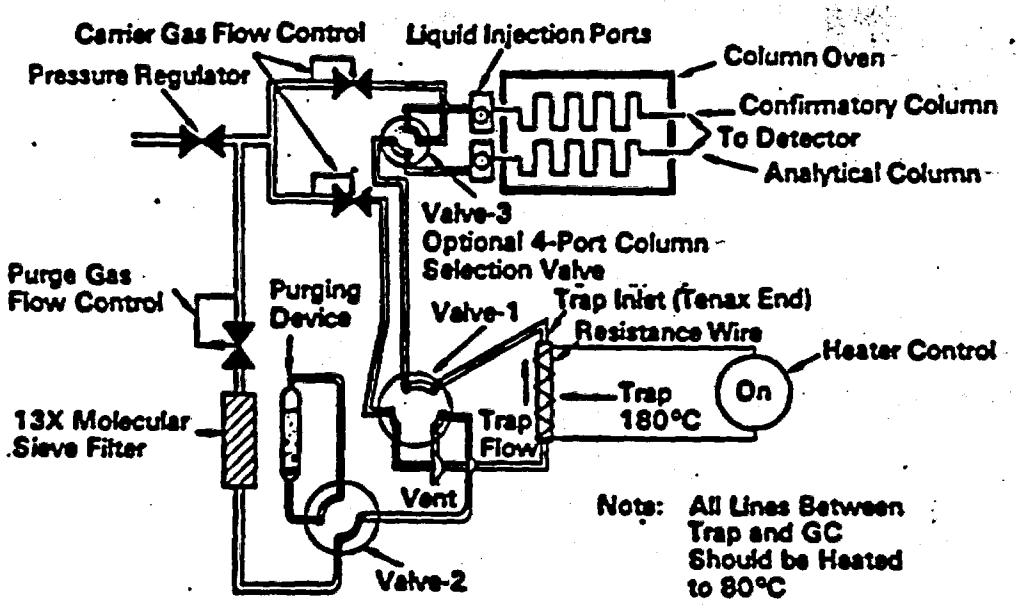

Figure 5. Purge and trap system-desorb mode.

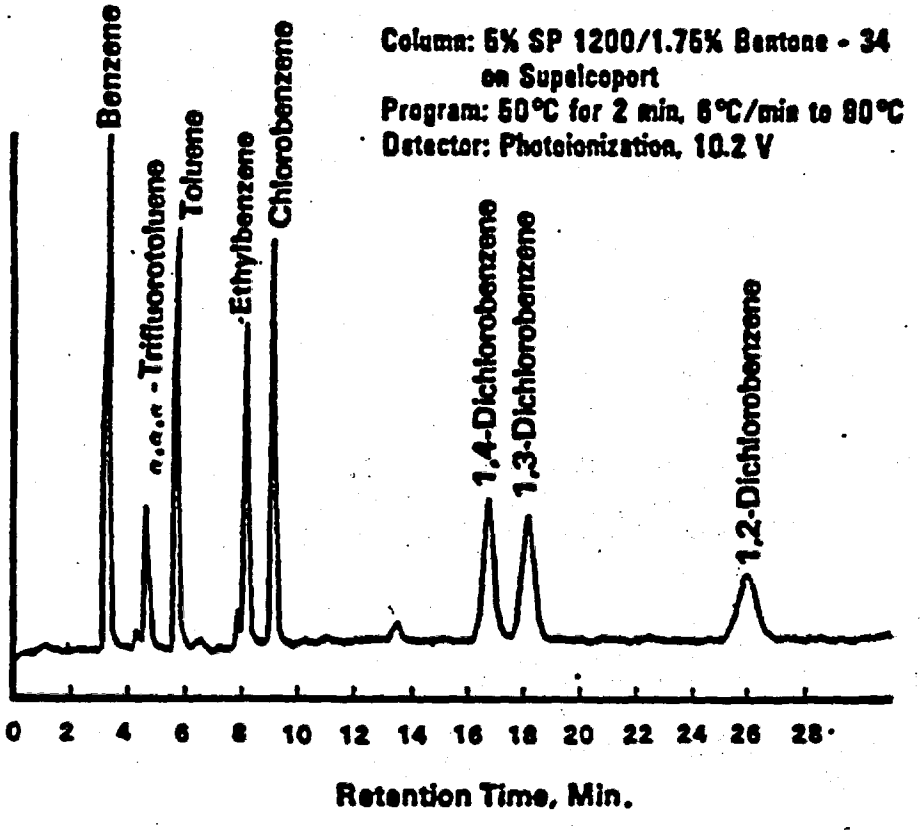

Figure 6. Gas chromatogram of purgeable aromatics.

AR301239

BILLING CODE 6560-50-C

CROYDON #2

U.S ENVIRONMENTAL PROTECTION AGENCY
CLP SAMPLE MANAGEMENT OFFICE
P.O. BOX 818 - ALEXANDRIA, VIRGINIA 22313
PHONE: 703/557-2490 - FTS/557-2490

SAS Number

SPECIAL ANALYTICAL SERVICES
Client Request

Regional Transmittal

Telephone Request

A. EPA Region/Client: EPA-Region III - REM III

B. RSCC Representative: Colleen Walling

C. Telephone Number: (301) 266-9180

D. Date of Request: September 21, 1988

E. Site Name: Croydon TCE Site, Bucks County, Pennsylvania

Please provide below description of your request for Special Analytical Services under the Contract Laboratory Program. In order to most efficiently obtain laboratory capability for your request, please address the following considerations, if applicable. Incomplete or erroneous information may result in a delay in the processing of your request. Please continue response on additional sheets, or attach supplementary information as needed.

1. General Description of analytical service requested:

   Analysis of 3 Dense Non-Aqueous Phase Layer (DNAPL) samples for TCL Organics by the 10/86 CLP SOW. The 20 TICs of greatest apparent concentration are requested for the VOA fraction; the B/N fraction; and the Acid fraction.

2. Definition and number of work units involved (specify whether whole samples or fractions; whether organics or inorganics; whether aqueous or soil and sediments; and whether low, medium, or high concentration):

   3 DNAPL samples; 1 field duplicate; and 1 laboratory duplicate for a total of 5 work units for TCL Organics. DNAPL samples will be non-aqueous liquids and may be high concentration samples.

3. Purpose of analysis (specify whether Superfund (enforcement or remedial action), RCRA, NPDES, etc.):

   Superfund - RI/FS - REM III
   Account No:

AR301240

SAS Approved By (signature):
Date:

4. **Estimated date(s) of collection:**

   November 28 - December 2, 1988

5. **Estimated date(s) and method of shipment:**

   November 28 - December 2, 1988

   Samples will be shipped daily by overnight air carrier. These dates are tentative and are dependent on the project remaining on schedule. Sampling may continue into the week of December 5.

6. **Number of days analysis and data required after laboratory receipt of samples:**

   45 days from the receipt of the last sample.

7. **Analytical protocol required (attach copy if other than protocol currently used in this program):**

   10/86 Revision of "Statement of Work for Organic Analysis; Multi-Media; High/Medium Concentration", if sample is screened as high concentration.

8. **Special technical instructions (if outside protocol requirements, specify compound names, CAS numbers, detection limits, etc.):**

   Sample must be screened prior to organic analysis and if level of contamination is shown to be below 20,000 ug/l, laboratory is to contact SMO for further instructions.

9. **Analytical results required (if known, specify format for data sheets, QA/QC reports, Chain-of-Custody documentation, etc.) If not completed, format of results will be left to program discretion.**

   Per Exhibit B of the 10/86 SOW. In addition, the Chain-of-Custody forms, the SAS Packing lists, and the SAS request form should also be included.

10. **Other (use additional sheets or attach supplementary information, as needed):**

    The 20 TICs of greatest apparent concentration are requested for each of the 3 fractions (VOAs, B/N, and Acid).

11. **Name of sampling/shipping contact:**

    Raymond Wattras - NUS Corp.
    (412) 788-1080

12. Data Requirements

Parameter	Detection Limit	Precicion Desired (+% or Concentration)
All compounds	Specified in 10/86 CLP SOW	Specified in 10/86 SOW

13. QC Requirements

Audits Required	Frequency of Audits	Limits (Percent or Concentration)
Specified in 10/86 SOW	Specified in 10/86 SOW	Specified in 10/86 SOW

14. Action Required if Limits are Exceeded

Specified in 10/86 CLP SOW

15. Request Prepared By:

Gregory L. Zimmerman - NUS Corporation - (412) 788-1080
September 22, 1988

16. Request Reviewed By (CRL use only):
Date:

AR301242

Please return this request to the Sample Management Office as soon as possible to expedite processing of your request for Special Analytical Services. Should you have any questions or need any assistance, please contact your Regional representative at the Sample Management Office.

CROYDON #3

U.S ENVIRONMENTAL PROTECTION AGENCY
CLP SAMPLE MANAGEMENT OFFICE
P.O. BOX 818 - ALEXANDRIA, VIRGINIA 22313
PHONE: 703/557-2490 - FTS/557-2490

SAS Number

SPECIAL ANALYTICAL SERVICES
Client Request

Regional Transmittal

Telephone Request

A. EPA Region/Client: EPA-Region III - REM III

B. RSCC Representative: Colleen Walling

C. Telephone Number: (301) 266-9180

D. Date of Request: September 21, 1988

E. Site Name: Croydon TCE Site, Bucks County, Pennsylvania

Please provide below description of your request for Special Analytical Services under the Contract Laboratory Program. In order to most efficiently obtain laboratory capability for your request, please address the following considerations, if applicable. Incomplete or erroneous information may result in a delay in the processing of your request. Please continue response on additional sheets, or attach supplementary information as needed.

1. General Description of analytical service requested:

   Analysis of 3 Dense Non-Aqueous Phase Layer (DNAPL) samples for TAL Metals; cyanide; and sulfide as per the 2/85 CLP Inorganic SOW. Cyanide must be analyzed by method 335.63 andsulfide must be analyzed by 376.63 and not the spot test.

2. Definition and number of work units involved (specify whether whole samples or fractions; whether organics or inorganics; whether aqueous or soil and sediments; and whether low, medium, or high concentration):

   3 DNAPL samples; 1 field duplicate; and 1 laboratory duplicate for a total of 5 work units for the above analysis. DNAPL samples will be non-aqueous liquids and may be high concentration samples.

3. Purpose of analysis (specify whether Superfund (enforcement or remedial action), RCRA, NPDES, etc.):

   Superfund - RI/FS - REM III
   Account No:

AR301243

SAS Approved By (signature):
Date:

4. **Estimated date(s) of collection:**

November 28 - December 2, 1988

5. **Estimated date(s) and method of shipment:**

November 28 - December 2, 1988
Samples will be shipped daily by overnight air carrier. These dates are tentative and are dependent on the project remaining on schedule. Sampling may continue into the week of December 5.

6. **Number of days analysis and data required after laboratory receipt of samples:**

45 days from date of receipt of the last sample.

7. **Analytical protocol required (attach copy if other than protocol currently used in this program):**

Analysis for TAL Metals by "High Concentration Statement of Work for Inorganic Analysis", 2/85 Revision. Cyanide must be analyzed by method 335.63 and sulfide must be analyzed by mathod 376.63 and not by the spot test.

8. **Special technical instructions (if outside protocol requirements, specify compound names, CAS numbers, detection limits, etc.):**

If samples are determined to be at low concentration levels, contact SMO immediately for further instructions. If samples are multi-phase, notify SMO. Seperate analysis for each phase is required.

9. **Analytical results required (if known, specify format for data sheets, QA/QC reports, Chain-of-Custody documentation, etc.) If not completed, format of results will be left to program discretion.**

Per Exhibit B of the 2/85 SOW. In addition, the Chain-of-Custody forms, the SAS packing lists, and the SAS request form should also be included.

10. **Other (use additional sheets or attach supplementary information, as needed):**

11. **Name of sampling/shipping contact:**

Raymond Wattras - NUS Corp.
(412) 788-1080

AR301244

12. Data Requirements

Parameter	Detection Limit	Precicion Desired (+% or Concentration)
All compounds	1 mg/kg	Specified in 2/85 CLP Inorganic SOW

13. QC Requirements

Audits Required	Frequency of Audits	Limits (Percent or Concentration)
Specified in 2/85 CLP Inorganic SOW	Specified in 2/85 CLP Inorganic Sow	Specified in 2/85 CLP Inorganic SOW

14. Action Required if Limits are Exceeded

Specified in 2/85 CLP Inorganic SOW.

15. Request Prepared By:

Gregory L. Zimmerman - NUS Corporation - (412) 788-1080
September 22, 1988

16. Request Reviewed By (CRL use only):
Date:

Please return this request to the Sample Management Office as soon as possible to expedite processing of your request for Special Analytical Services. Should you have any questions or need any assistance, please contact your Regional representative at the Sample Management Office.

AR301245

AR301245

Croydon #4

U.S ENVIRONMENTAL PROTECTION AGENCY
CLP SAMPLE MANAGEMENT OFFICE
P.O. BOX 818 - ALEXANDRIA, VIRGINIA 22313
PHONE: 703/557-2490 - FTS/557-2490

SAS Number

SPECIAL ANALYTICAL SERVICES
Client Request

Regional Transmittal

Telephone Request

A. EPA Region/Client: EPA-Region III - REM III

B. RSCC Representative: Colleen Walling

C. Telephone Number: (301) 266-9180

D. Date of Request: September 22, 1988

E. Site Name: Croydon TCE Site, Bucks County, Pennsylvania

Please provide below description of your request for Special Analytical Services under the Contract Laboratory Program. In order to most efficiently obtain laboratory capability for your request, please address the following considerations, if applicable. Incomplete or erroneous information may result in a delay in the processing of your request. Please continue response on additional sheets, or attach supplementary information as needed.

1. General Description of analytical service requested:

   Analysis of 3 Dense Non-Aqueous Phase Layer (DNAPL) samples for total organic carbon (TOC) by EPA method 415.1.

2. Definition and number of work units involved (specify whether whole samples or fractions; whether organics or inorganics; whether aqueous or soil and sediments; and whether low, medium, or high concentration):

   3 DNAPL samples; 1 field duplicate; and 1 laboratory duplicate for a total of 5 work units for TOC. DNAPL samples will be non-aqueous liquid and may be high concentration samples.

3. Purpose of analysis (specify whether Superfund (enforcement or remedial action), RCRA, NPDES, etc.):

   Superfund - RI/FS - REM III
   Account No:

SAS Approved By (signature):
Date:

AR301246

4. **Estimated date(s) of collection:**

   November 28 - December 2, 1988

5. **Estimated date(s) and method of shipment:**

   November 28 - December 2, 1988

   Samples will be shipped daily by overnight air carrier. These dates are tentative and are dependent on the project remaining on schedule. Sampling may continue into the week of December 5.

6. **Number of days analysis and data required after laboratory receipt of samples:**

   40 days from date of receipt of the last sample.

7. **Analytical protocol required (attach copy if other than protocol currently used in this program):**

   TOC - EPA 415.1, from "Methods for Chemical Analysis of Water and Wastes", EPA-600/4-79-020, March 1983.
   Method attached.

8. **Special technical instructions (if outside protocol requirements, specify compound names, CAS numbers, detection limits, etc.):**

9. **Analytical results required (if known, specify format for data sheets, QA/QC reports, Chain-of-Custody documentation, etc.) If not completed, format of results will be left to program discretion.**

   Raw data, calculations, data sheets, duplicate results, chain of custody forms, SAS packing lists, and SAS Request Form.

10. **Other (use additional sheets or attach supplementary information, as needed):**

11. **Name of sampling/shipping contact:**

    Raymond Wattras - NUS Corp.
    (412) 788-1080

AR301247

12. Data Requirements

Parameter	Detection Limit	Precicion Desired (+% or Concentration)
TOC	1.0 mg/l	± 20%

13. QC Requirements

Audits Required	Frequency of Audits	Limits (Percent or Concentration)
Duplicate	1/20	± 20 %

14. Action Required if Limits are Exceeded

Re-analyze samples once more.

15. Request Prepared By:

Gregory L. Zimmerman - NUS Corporation - (412) 788-1080
September 22, 1988

16. Request Reviewed By (CRL use only):
Date:

Please return this request to the Sample Management Office as soon as possible to expedite processing of your request for Special Analytical Services. Should you have any questions or need any assistance, please contact your Regional representative at the Sample Management Office.

AR301248

ORGANIC CARBON, TOTAL

Method 415.1 (Combustion or Oxidation)

STORET NO. Total 00680
Dissolved 00681

1. Scope and Application
   1.1 This method includes the measurement of organic carbon in drinking, surface and saline waters, domestic and industrial wastes. Exclusions are noted under Definitions and Interferences.
   1.2 The method is most applicable to measurement of organic carbon above 1 mg/l.
2. Summary of Method
   2.1 Organic carbon in a sample is converted to carbon dioxide (CO_2) by catalytic combustion or wet chemical oxidation. The CO_2 formed can be measured directly by an infrared detector or converted to methane (CH_4) and measured by a flame ionization detector. The amount of CO_2 or CH_4 is directly proportional to the concentration of carbonaceous material in the sample.
3. Definitions
   3.1 The carbonaceous analyzer measures all of the carbon in a sample. Because of various properties of carbon-containing compounds in liquid samples, preliminary treatment of the sample prior to analysis dictates the definition of the carbon as it is measured. Forms of carbon that are measured by the method are:
      A) soluble, nonvolatile organic carbon; for instance, natural sugars.
      B) soluble, volatile organic carbon; for instance, mercaptans.
      C) insoluble, partially volatile carbon; for instance, oils.
      D) insoluble, particulate carbonaceous materials, for instance; cellulose fibers.
      E) soluble or insoluble carbonaceous materials adsorbed or entrapped on insoluble inorganic suspended matter; for instance, oily matter adsorbed on silt particles.
   3.2 The final usefulness of the carbon measurement is in assessing the potential oxygen-demanding load of organic material on a receiving stream. This statement applies whether the carbon measurement is made on a sewage plant effluent, industrial waste, or on water taken directly from the stream. In this light, carbonate and bicarbonate carbon are not a part of the oxygen demand in the stream and therefore should be discounted in the final calculation or removed prior to analysis. The manner of preliminary treatment of the sample and instrument settings defines the types of carbon which are measured. Instrument manufacturer's instructions should be followed.

Approved for NPDES
Issued 1971
Editorial revision 1974

AR301249

4. Sample Handling and Preservation

4.1 Sampling and storage of samples in glass bottles is preferable. Sampling and storage in plastic bottles such as conventional polyethylene and cubitainers is permissible if it is established that the containers do not contribute contaminating organics to the samples.
NOTE 1: A brief study performed in the EPA Laboratory indicated that distilled water stored in new, one quart cubitainers did not show any increase in organic carbon after two weeks exposure.

4.2 Because of the possibility of oxidation or bacterial decomposition of some components of aqueous samples, the lapse of time between collection of samples and start of analysis should be kept to a minimum. Also, samples should be kept cool (4°C) and protected from sunlight and atmospheric oxygen.

4.3 In instances where analysis cannot be performed within two hours (2 hours) from time of sampling, the sample is acidified (pH $\leq$ 2) with HCl or H_2SO_4.

5. Interferences

5.1 Carbonate and bicarbonate carbon represent an interference under the terms of this test and must be removed or accounted for in the final calculation.

5.2 This procedure is applicable only to homogeneous samples which can be injected into the apparatus reproducibly by means of a microliter type syringe or pipette. The openings of the syringe or pipette limit the maximum size of particles which may be included in the sample.

6. Apparatus

6.1 Apparatus for blending or homogenizing samples: Generally, a Waring-type blender is satisfactory.

6.2 Apparatus for total and dissolved organic carbon:

6.2.1 A number of companies manufacture systems for measuring carbonaceous material in liquid samples. Considerations should be made as to the types of samples to be analyzed, the expected concentration range, and forms of carbon to be measured.

6.2.2 No specific analyzer is recommended as superior.

7. Reagents

7.1 Distilled water used in preparation of standards and for dilution of samples should be ultra pure to reduce the carbon concentration of the blank. Carbon dioxide-free, double distilled water is recommended. Ion exchanged waters are not recommended because of the possibilities of contamination with organic materials from the resins.

7.2 Potassium hydrogen phthalate, stock solution, 1000 mg carbon/liter: Dissolve 0.2128 g of potassium hydrogen phthalate (Primary Standard Grade) in distilled water and dilute to 100.0 ml.
NOTE 2: Sodium oxalate and acetic acid are not recommended as stock solutions.

7.3 Potassium hydrogen phthalate, standard solutions: Prepare standard solutions from the stock solution by dilution with distilled water.

7.4 Carbonate-bicarbonate, stock solution, 1000 mg carbon/liter: Weigh 0.3500 g of sodium bicarbonate and 0.4418 g of sodium carbonate and transfer both to the same 100 ml volumetric flask. Dissolve with distilled water.

AR301250

7.5 Carbonate-bicarbonate, standard solution: Prepare a series of standards similar to step 7.3.

NOTE 3: This standard is not required by some instruments.

7.6 Blank solution: Use the same distilled water (or similar quality water) used for the preparation of the standard solutions.

8 Procedure

8.1 Follow instrument manufacturer's instructions for calibration, procedure, and calculations.

8.2 For calibration of the instrument, it is recommended that a series of standards encompassing the expected concentration range of the samples be used.

9. Precision and Accuracy

9.1 Twenty-eight analysts in twenty-one laboratories analyzed distilled water solutions containing exact increments of oxidizable organic compounds, with the following results:

Increment as TOC mg/liter	Precision as Standard Deviation TOC, mg/liter	Accuracy as Bias, %	Bias, mg/liter
4.9	3.93	−15.27	+0.75
107	8.32	+ 1.01	+1.08

(FWPCA Method Study 3, Demand Analyses)

Bibliography

1. Annual Book of ASTM Standards, Part 31, "Water", Standard D 2574–79, p 469 (1976).
2. Standard Methods for the Examination of Water and Wastewater, 14th Edition, p 532, Method 505, (1975).

AR301251

CROYDON #5

U.S ENVIRONMENTAL PROTECTION AGENCY
CLP SAMPLE MANAGEMENT OFFICE
P.O. BOX 818 - ALEXANDRIA, VIRGINIA 22313
PHONE: 703/557-2490 - FTS/557-2490

SAS Number-

SPECIAL ANALYTICAL SERVICES
Client Request

Regional Transmittal

Telephone Request

A. EPA Region/Client: EPA-Region III - REM III

B. RSCC Representative: Colleen Walling

C. Telephone Number: (301) 266-9180

D. Date of Request: September 22, 1988

E. Site Name: Croydon TCE Site, Bucks County, Pennsylvania

Please provide below description of your request for Special Analytical Services under the Contract Laboratory Program. In order to most efficiently obtain laboratory capability for your request, please address the following considerations, if applicable. Incomplete or erroneous information may result in a delay in the processing of your request. Please continue response on additional sheets, or attach supplementary information as needed.

1. General Description of analytical service requested:

   Analysis of 9 residential well samples and 3 rinsate blanks for VOAs by EPA Methods 601 and 602. Second column confirmation of positives >1 ug/l is required. A purge and trap volatiles analysis of a 5 ml water sample analyzed on a gas chromatagraph equipped with a Hall Detector and Photoionization Detector (PID) is required.

2. Definition and number of work units involved (specify whether whole samples or fractions; whether organics or inorganics; whether aqueous or soil and sediments; and whether low, medium, or high concentration):

   9 low concentration residential well samples; 2 field duplicates; 1 laboratory duplicate; and 3 low concentration rinsate blanks for a total of 15 work units for VOAs by EPA Methods 601 and 602. Second column confirmation is required.

3. Purpose of analysis (specify whether Superfund (enforcement or remedial action), RCRA, NPDES, etc.):

   Superfund - RI/FS - REM III
   Account No:

AR301252

SAS Approved By (signature):
Date:

4. **Estimated date(s) of collection:**

   November 14 - 18, 1988

5. **Estimated date(s) and method of shipment:**

   November 14 - 18, 1988

   Samples will be shipped daily by overnight air carrier. These dates are tentative and are dependent on the project remaining on schedule. Sampling may continue into the week of November 21.

6. **Number of days analysis and data required after laboratory receipt of samples:**

   40 days from receipt of the last sample.

7. **Analytical protocol required (attach copy if other than protocol currently used in this program):**

   EPA Methods 601/602 from "Methods for Organic Chemical Analysis of Municipal and Industrial Wastewater". EPA-600/4-82-057, July 1982. Second column confirmation is required. Method is attached. See Appendix A; Attachments #1 and #2 for specific requirements.

8. **Special technical instructions (if outside protocol requirements, specify compound names, CAS numbers, detection limits, etc.):**

   Second column confirmation is required. See Appendix A; Attachments #1 and #2 for specific requirements.

9. **Analytical results required (if known, specify format for data sheets, QA/QC reports, Chain-of-Custody documentation, etc.) If not completed, format of results will be left to program discretion.**

   Package format similar to CLP as per Exhibit B, Section II of the USEPA Contract Laboratory Program, Statement of Work for Organic Analysis, July 1987 Revision. See Appendix A; Attachments #1 and #2 and Note #4 for specific requirements.

10. **Other (use additional sheets or attach supplementary information, as needed):**

11. **Name of sampling/shipping contact:**

    Raymond Wattras - NUS Corp.
    (412) 788-1080

AR301253

12. Data Requirements

Parameter	Detection Limit	Precicion Desired (+% or Concentration)

Target Compounds - See Note #1, Appendix A, Attachment #1

Detection Limits - See Note #1, Appendix A

13. QC Requirements

Audits Required	Frequency of Audits	Limits (Percent or Concentration)
Quality Control Check Sample	4 Initially and then 1/10 samples	per Section 8.2.5 of attached method
Blanks	1/day of analysis	Below method detection limit.
Matrix Spike	1/10	per Section 8.3 of attached method
Matrix Spike Duplicate	1/10	per Section 8.3 of attached method

Initial and Continuing Calibration - See Notes #2 and #3, Appendix A and Attachment #2.

14. Action Required if Limits are Exceeded

As specified in the Attached Appendices and Attachments.

15. Request Prepared By:

Gregory L. Zimmerman - NUS Corporation - (412) 788-1080
September 22, 1988

16. Request Reviewed By (CRL use only):
Date:

Please return this request to the Sample Management Office as soon as possible to expedite processing of your request for Special Analytical Services. Should you have any questions or need any assistance, please contact your Regional representative at the Sample Management Office.

AR301254

AR301254

APPENDIX A

NOTE 1.

Target compounds are halogenated volatile compounds from the CLP TCL plus benzene, toluene, ethyl benzene, xylene isomers, dichlorobenzene isomers and chlorobenzene. The required detection limits are 1 (ug/L). Sample results indicating levels > 1 (ug/L), must be confirmed using a second column analysis.

NOTE 2.

EPA Methods 601 and 602 from 40 CFR Part 136 of 10/26/84 with:

A. Initial 3 point calibration(5, 20, 40 ppb).
B. One method blank every 12 hours .
C. Calibration check standard run at 20 ppb every 12 hours.
D. Second column confirmation for positives(values greater than 1(ug/L)); the second column must be a different column than the first.
E. Brief description by laboratory on specific procedure.

NOTE 3.

Calculate and compare response of initial calibration and checks standards. If the % deviation in the response factor comparison is > than 25%, call DPO Chuck Sands or John Scalera at (301) 266-9180 prior to data submission. At the Sample Management Office (SMO), action determined by the degree of non-compliance may range from:

A. Only noting non-compliance in the report narrative.
B. Requiring a new initial calibration and a reanalysis of all samples asssociated with the unusable check standard.

NOTE 4.

Deliverables include a package format similar to CLP as per Exhibit B, Section II of the USEPA Contract Lab Program, 10/86 Statement of Work for Organic Analysis including all revisions up to the 7/87 Revision. Deliverables also include:

1. SAS Request Form.
2. All sample and standard chromatograms and quantitation lists.
3. Response factor calculations(initial calibration versus check standards).
4. Method blanks and duplicate chromatograms and quantitation lists.
5. All sample calculations.
6. Instrument run logs.
7. Narrative identifying instrument model, column used and operating parameters.
8. Chain-of-Custody Forms and sample packing list.

SAS

ATTACHMENT # 1

Target Compound List:

601

Chloromethane
Bromomethane
Vinyl Chloride
Chloroethane
Methylene Chloride
1,1-Dichloroethene
1,1-Dichloriethane
Total-1,2-Dichloroethene (trans and cis isomers)
Chloroform
1,2-Dichloroethane
1,1,1-Trichloroethane
Carbon Tetrachloride
Bromodichloromethane
1,1,2,2-Tetrachloroethane
1,2-Dichloropropane
trans-1,3-Dichloropropene
Trichloroethene
Dibromochloromethane
1,1,2-Trichloroethane
cis-1,3-Dichloropropene
Bromoform
Tetrachloroethene
Chlorobenzene

602

Benzene
Toluene
Ethyl Benzene
Xylenes (total)

*Also optional analysis for:

(a) 1,2-dichlorobenzene;
(b) 1,3-dichlorobenzene;
(c) 1,4-dichlorobenzene;
(d) dichlorodifluoromethane (Freon) and
(e) trichlorofluoromethane (Freon)

Please note the first mentioned Freon may coelute with vinyl chloride in this method and result in a false positive analysis.

ATTACHMENT #2

Examples of Actions Related to Data Compliance

A. Example of non-compliance requiring little action: Laboratory notes non-compliance in narrative only, analysis proceeds.

Analysis is for all halocarbons listed in Attachment #1, but trichloroethene is of primary interest. Response factor of Bromodichloromethane changes 30% from initial calibration calculation to check standard response factor calculation. Laboratory must only note non-compliance in narrative.

B. Example of non-compliance requiring DPO/SMO action and intervention:

Analysis is for trichloroethene only. There are samples with positive trichloroethene results. Check standard response factor (>50%) different from initial calibration response factor. Laboratory notifies DPO. SMO requires a new initial calibration and reanalysis of all samples associated with the non-compliant check standard.

Table II Notes

[1] Polyethylene (P) or Glass (G)

[2] Sample preservation should be performed immediately upon sample collection. For composite chemical samples each aliquot should be preserved at the time of collection. When an automated sampler makes it impossible to preserve each aliquot, then chemical samples may be preserved by maintaining at 4°C until compositing and sample splitting is completed.

[3] When any sample is to be shipped by common carrier or sent through the United States Mails, it must comply with the Department of Transportation Hazardous Materials Regulations (49 CFR Part 172). The person offering such material for transportation is responsible for ensuring such compliance. For the preservation requirements of Table II, the Office of Hazardous Materials, Materials Transportation Bureau, Department of Transportation has determined that the Hazardous Materials Regulations do not apply to the following materials: Hydrochloric acid (HCl) in water solutions at concentrations of 0.04% by weight or less (pH about 1.96 or greater), Nitric acid (HNO_3) in water solutions at concentrations of 0.15% by weight or less (pH about 1.62 or greater), Sulfuric acid (H_2SO_4) in water solutions at concentrations of 0.35% by weight or less (pH about 1.15 or greater), and Sodium hydroxide (NaOH) in water solutions at concentrations of 0.080% by weight or less (pH about 12.30 or less).

[4] Samples should be analyzed as soon as possible after collection. The times listed are the maximum times that samples may be held before analysis and still be considered valid. Samples may be held for longer periods only if the permittee, or monitoring laboratory, has data on file to show that the specific types of samples under study are stable for the longer time, and has received a variance from the Regional Administrator under § 136.3(e). Some samples may not be stable to the maximum time period given in the table. A permittee or monitoring laboratory is obligated to hold the sample for a shorter time if knowledge exists to show that this is necessary to maintain sample stability. See § 136.3(e) for details.

[5] Should only be used in the presence of residual chlorine.

[6] Maximum holding time is 24 hours when sulfide is present. Optionally, all samples may be tested with lead acetate paper before pH adjustments in order to determine if sulfide is present. If sulfide is present, it can be removed by the addition of cadmium nitrate powder until a negative spot test is obtained. The sample is filtered and then NaOH is added to pH 12.

[7] Samples should be filtered immediately on-site before adding preservative for dissolved metals.

[8] Guidance applies to samples to be analyzed by GC, LC, or GC/MS for specific compounds.

[9] Sample receiving no pH adjustment must be analyzed within seven days of sampling.

[10] The pH adjustment is not required if acrolein will not be measured. Samples for acrolein receiving no pH adjustment must be analyzed within 3 days of sampling.

[11] When the extractable analytes of concern fall within a single chemical category, the specified preservative and maximum holding times should be observed for optimum safeguard of sample integrity. When the analytes of concern fall within two or more chemical categories, the sample may be preserved by cooling to 4°C, reducing residual chlorine with 0.008% sodium thiosulfate, storing in the dark, and adjusting the pH to 6-9; samples preserved in this manner may be held for seven days before extraction and for forty days after extraction. Exceptions to this optional preservation and holding time procedure are noted in footnote 5 (re the requirement for thiosulfate reduction of residual chlorine) and footnotes 12, 13 (re the analysis of benzidines).

[12] If 1,2-diphenylhydrazine is likely to be present, adjust the pH of the sample to 4.0±0.2 to prevent rearrangement to benzidine.

[13] Extracts may be stored up to 7 days before analysis if storage is conducted under an inert (oxidant-free) atmosphere.

[14] For the analysis of diphenylnitrosamine, add 0.008% $Na_2S_2O_3$ and adjust pH to 7-10 with NaOH within 24 hours of sampling.

[15] The pH adjustment may be performed upon receipt at the laboratory and may be omitted if the samples are extracted within 72 hours of collection. For the analysis of aldrin, add 0.008% $Na_2S_2O_3$.

8. Appendices A, B, and C are added to Part 136 to read as follows:

APPENDIX A TO PART 136—METHODS FOR ORGANIC CHEMICAL ANALYSIS OF MUNICIPAL AND INDUSTRIAL WASTEWATER.

Method 601—Purgeable Halocarbons

1. Scope and Application

1.1 This method covers the determination of 29 purgeable halocarbons.

The following parameters may be determined by this method:

Parameter	STORET No.	CAS No.
Bromodichloromethane	32101	75-27-4
Bromoform	32104	75-25-2
Bromomethane	34413	74-83-9
Carbon tetrachloride	32102	56-23-5
Chlorobenzene	34301	108-90-7
Chloroethane	34311	75-00-3
2-Chloroethylvinyl ether	34576	100-75-8
Chloroform	32106	67-66-3
Chloromethane	34418	74-87-3
Dibromochloromethane	32105	124-48-1
1,2-Dichlorobenzene	34536	95-50-1
1,3-Dichlorobenzene	34566	541-73-1
1,4-Dichlorobenzene	34571	106-46-7
Dichlorodifluoromethane	34668	75-71-8
1,1-Dichloroethane	34496	75-34-3
1,2-Dichloroethane	34531	107-06-2
1,1-Dichloroethene	34501	75-35-4
trans-1,2-Dichloroethene	34546	156-60-5
1,2-Dichloropropane	34541	78-87-5
cis-1,3-Dichloropropene	34704	10061-01-5
trans-1,3-Dichloropropene	34699	10061-02-6
Methylene chloride	34423	75-09-2
1,1,2,2-Tetrachloroethane	34516	79-34-5
Tetrachloroethene	34475	127-18-4
1,1,1-Trichloroethane	34506	71-55-6
1,1,2-Trichloroethane	34511	79-00-5
Trichloroethene	39180	79-01-6
Trichlorofluoromethane	34488	75-69-4
Vinyl chloride	39175	75-01-4

1.2 This is a purge and trap gas chromatographic (GC) method applicable to the determination of the compounds listed above in municipal and industrial discharges as provided under 40 CFR 136.1. When this method is used to analyze unfamiliar samples for any or all of the compounds above, compound identifications should be supported by at least one additional qualitative technique. This method describes analytical conditions for a second gas chromatographic column that can be used to confirm measurements made with the primary column. Method 624 provides gas chromatograph/mass spectrometer (GC/MS) conditions appropriate for the qualitative and quantitative confirmation of results for most of the parameters listed above.

1.3 The method detection limit (MDL, defined in Section 12.1)[1] for each parameter is listed in Table 1. The MDL for a specific wastewater may differ from those listed, depending upon the nature of interferences in the sample matrix.

1.4 Any modification of this method, beyond those expressly permitted, shall be considered as a major modification subject to application and approval of alternate test procedures under 40 CFR 136.4 and 136.5.

1.5 This method is restricted to use by or under the supervision of analysts experienced in the operation of a purge and trap system and a gas chromatograph and in the interpretation of gas chromatograms. Each analyst must demonstrate the ability to generate acceptable results with this method using the procedure described in Section 8.2.

2. Summary of Method

2.1 An inert gas is bubbled through a 5-mL water sample contained in a specially-designed purging chamber at ambient temperature. The halocarbons are efficiently transferred from the aqueous phase to the vapor phase. The vapor is swept through a sorbent trap where the halocarbons are trapped. After purging is completed, the trap is heated and backflushed with the inert gas to desorb the halocarbons onto a gas chromatographic column. The gas chromatograph is temperature programmed to separate the halocarbons which are then detected with a halide-specific detector.[2,3]

2.2 The method provides an optional gas chromatographic column that may be helpful in resolving the compounds of interest from interferences that may occur.

3. Interferences

3.1 Impurities in the purge gas and organic compounds outgassing from the plumbing ahead of the trap account for the majority of contamination problems. The analytical system must be demonstrated to be free from contamination under the conditions of the analysis by running laboratory reagent blanks as described in Section 8.1.3. The use of non-Teflon plastic tubing, non-Teflon thread sealants, or flow controllers with rubber components in the purge and trap system should be avoided.

3.2 Samples can be contaminated by diffusion of volatile organics (particularly fluorocarbons and methylene chloride) through the septum seal into the sample during shipment and storage. A field reagent blank prepared from reagent water and carried through the sampling and handling protocol can serve as a check on such contamination.

3.3 Contamination by carry-over can occur whenever high level and low level samples are sequentially analyzed. To reduce carry-over, the purging device and sample syringe must be rinsed with reagent water between sample analyses. Whenever an unusually concentrated sample is encountered, it should be followed by an analysis of reagent water to check for cross contamination. For samples containing large amounts of water-soluble materials, suspended solids, high boiling compounds or high organohalide levels, it may be necessary to wash out the purging device with a detergent solution, rinse it with distilled water, and then dry it in a 105°C oven between analyses. The trap and other parts of the system are also subject to contamination; therefore, frequent bakeout and purging of the entire system may be required.

4. Safety

4.1 The toxicity or carcinogenicity of each reagent used in this method has not been precisely defined; however, each chemical compound should be treated as a potential health hazard. From this viewpoint, exposure to these chemicals must be reduced to the lowest possible level by whatever means available. The laboratory is responsible for maintaining a current awareness file of OSHA regulations regarding the safe handling of the chemicals specified in this method. A reference file of material data handling sheets should also be made available to all personnel involved in the chemical analysis. Additional references to laboratory safety are available and have been identified[4,5] for the information of the analyst.

AR 301258

4.2 The following parameters covered by this method have been tentatively classified as known or suspected, human or mammalian carcinogens: carbon tetrachloride, chloroform, 1,4-dichlorobenzene, and vinyl chloride. Primary standards of these toxic compounds should be prepared in a hood. A NIOSH/MESA approved toxic gas respirator should be worn when the analyst handles high concentrations of these toxic compounds.

5. Apparatus and Materials

5.1 Sampling equipment, for discrete sampling.

5.1.1 Vial—25-mL capacity or larger, equipped with a screw cap with a hole in the center (Pierce #13075 or equivalent). Detergent wash, rinse with tap and distilled water, and dry at 105 °C before use.

5.1.2 Septum—Teflon-faced silicone (Pierce #12722 or equivalent). Detergent wash, rinse with tap and distilled water, and dry at 105 °C for 1 h before use.

5.2 Purge and trap system—The purge and trap system consists of three separate pieces of equipment: a purging device, trap, and desorber. Several complete systems are now commercially available.

5.2.1 The purging device must be designed to accept 5-mL samples with a water column at least 3 cm deep. The gaseous head space between the water column and the trap must have a total volume of less than 15 mL. The purge gas must pass through the water column as finely divided bubbles with a diameter of less than 3 mm at the origin. The purge gas must be introduced no more than 5 mm from the base of the water column. The purging device illustrated in Figure 1 meets these design criteria.

5.2.2 The trap must be at least 25 cm long and have an inside diameter of at least 0.105 in. The trap must be packed to contain the following minimum lengths of adsorbents: 1.0 cm of methyl silicone coated packing (Section 6.3.3), 7.7 cm of 2,6-diphenylene oxide polymer (Section 6.3.2), 7.7 cm of silica gel (Section 6.3.4), 7.7 cm of coconut charcoal (Section 6.3.1). If it is not necessary to analyze for dichlorodifluoromethane, the charcoal can be eliminated, and the polymer section lengthened to 15 cm. The minimum specifications for the trap are illustrated in Figure 2.

5.2.3 The desorber must be capable of rapidly heating the trap to 180 °C. The polymer section of the trap should not be heated higher than 180 °C and the remaining sections should not exceed 200 °C. The desorber illustrated in Figure 2 meets these design criteria.

5.2.4 The purge and trap system may be assembled as a separate unit or be coupled to a gas chromatograph as illustrated in Figures 3 and 4.

5.3 Gas chromatograph—An analytical system complete with a temperature programmable gas chromatograph suitable for on-column injection and all required accessories including syringes, analytical columns, gases, detector, and strip-chart recorder. A data system is recommended for measuring peak areas.

5.3.1 Column 1—8 ft long x 0.1 in. ID stainless steel or glass, packed with 1% SP-1000 on Carbopack B (60/80 mesh) or equivalent. This column was used to develop the method performance statements in Section 12. Guidelines for the use of alternate column packings are provided in Section 10.1.

5.3.2 Column 2—8 ft long x 0.1 in. ID stainless steel or glass, packed with chemically bonded n-octane on Porasil-C (100/120 mesh) or equivalent.

5.3.3 Detector—Electrolytic conductivity or microcoulometric detector. These types of detectors have proven effective in the analysis of wastewaters for the parameters listed in the scope (Section 1.1). The electrolytic conductivity detector was used to develop the method performance statements in Section 12. Guidelines for the use of alternate detectors are provided in Section 10.1.

5.4 Syringes—5-mL glass hypodermic with Luerlok tip (two each), if applicable to the purging device.

5.5 Micro syringes—25-µL, 0.006 in. ID needle.

5.6 Syringe valve—2-way, with Luer ends (three each).

5.7 Syringe—5-mL, gas-tight with shut-off valve.

5.8 Bottle—15-mL, screw-cap, with Teflon cap liner.

5.9 Balance—Analytical, capable of accurately weighing 0.0001 g.

6. Reagents

6.1 Reagent water—Reagent water is defined as a water in which an interferent is not observed at the MDL of the parameters of interest.

6.1.1 Reagent water can ge generated by passing tap water through a carbon filter bed containing about 1 lb of activated carbon (Filtrasorb-300, Calgon Corp., or equivalent).

6.1.2 A water purification system (Millipore Super-Q or equivalent) may be used to generate reagent water.

6.1.3 Reagent water may also be prepared by boiling water for 15 min. Subsequently, while maintaining the temperature at 90 °C, bubble a contaminant-free inert gas through the water for 1 h. While still hot, transfer the water to a narrow mouth screw-cap bottle and seal with a Teflon-lined septum and cap.

6.2 Sodium thiosulfate—(ACS) Granular.

6.3 Trap Materials:

6.3.1 Coconut charcoal—6/10 mesh sieved to 26 mesh, Barnebey Cheney, CA-580-26 lot # M-2649 or equivalent.

6.3.2 2,6-Diphenylene oxide polymer—Tenax, (60/80 mesh), chromatographic grade or equivalent.

6.3.3 Methyl silicone packing—3% OV-1 on Chromosorb-W (60/80 mesh) or equivalent.

6.3.4 Silica gel—35/60 mesh, Davison, grade-15 or equivalent.

6.4 Methanol—Pesticide quality or equivalent.

6.5 Stock standard solutions—Stock standard solutions may be prepared from pure standard materials or purchased as certified solutions. Prepare stock standard solutions in methanol using assayed liquids or gases as appropriate. Because of the toxicity of some of the organohalides, primary dilutions of these materials should be prepared in a hood. A NIOSH/MESA approved toxic gas respirator should be used when the analyst handles high concentrations of such materials.

6.5.1 Place about 9.8 mL of methanol into a 10-mL ground glass stoppered volumetric flask. Allow the flask to stand, unstoppered, for about 10 min or until all alcohol wetted surfaces have dried. Weigh the flask to the nearest 0.1 mg.

6.5.2 Add the assayed reference material:

6.5.2.1 Liquid—Using a 100 µL syringe, immediately add two or more drops of assayed reference material to the flask, then reweigh. Be sure that the drops fall directly into the alcohol without contacting the neck of the flask.

6.5.2.2 Gases—To prepare standards for any of the six halocarbons that boil below 30 °C (bromomethane, chloroethane, chloromethane, dichlorodifluoromethane, trichlorofluoromethane, vinyl chloride), fill a 5-mL valved gas-tight syringe with the reference standard to the 5.0-mL mark. Lower the needle to 5 mm above the methanol meniscus. Slowly introduce the reference standard above the surface of the liquid (the heavy gas will rapidly dissolve into the methanol).

6.5.3 Reweigh, dilute to volume, stopper, then mix by inverting the flask several times. Calculate the concentration in µg/µL from the net gain in weight. When compound purity is assayed to be 96% or greater, the weight can be used without correction to calculate the concentration of the stock standard. Commercially prepared stock standards can be used at any concentration if they are certified by the manufacturer or by an independent source.

6.5.4 Transfer the stock standard solution into a Teflon-sealed screw-cap bottle. Store, with minimal headspace, at −10 to −20 °C and protect from light.

6.5.5 Prepare fresh standards weekly for the six gases and 2-chloroethylvinyl ether. All other standards must be replaced after one month, or sooner if comparison with check standards indicates a problem.

6.6 Secondary dilution standards—Using stock standard solutions, prepare secondary dilution standards in methanol that contain the compounds of interest, either singly or mixed together. The secondary dilution standards should be prepared at concentrations such that the aqueous calibration standards prepared in Sections 7.3.1 or 7.4.1 will bracket the working range of the analytical system. Secondary dilution standards should be stored with minimal headspace and should be checked frequently for signs of degradation or evaporation, especially just prior to preparing calibration standards from them.

6.7 Quality control check sample concentrate—See Section 8.2.1.

7. Calibration

7.1 Assemble a purge and trap system that meets the specifications in Section 5.2. Condition the trap overnight at 180 °C by backflushing with an inert gas flow of at least 20 mL/min. Condition the trap for 10 min once daily prior to use.

7.2 Connect the purge and trap system to a gas chromatograph. The gas chromatograph must be operated using temperature and flow

AR301259

AR301259

rate conditions equivalent to those given in Table 1. Calibrate the purge and trap-gas chromatographic system using either the external standard technique (Section 7.3) or the internal standard technique (Section 7.4).

7.3 External standard calibration procedure:

7.3.1 Prepare calibration standards at a minimum of three concentration levels for each parameter by carefully adding 20.0 µL of one or more secondary dilution standards to 100, 500, or 1000 mL of reagent water. A 25-µL syringe with a 0.006 in. ID needle should be used for this operation. One of the external standards should be at a concentration near, but above, the MDL (Table 1) and the other concentrations should correspond to the expected range of concentrations found in real samples or should define the working range of the detector. These aqueous standards can be stored up to 24 h, if held in sealed vials with zero headspace as described in Section 9.2. If not so stored, they must be discarded after 1 h.

7.3.2 Analyze each calibration standard according to Section 10, and tabulate peak height or area responses versus the concentration in the standard. The results can be used to prepare a calibration curve for each compound. Alternatively, if the ratio of response to concentration (calibration factor) is a constant over the working range (<10% relative standard deviation, RSD), linearity through the origin can be assumed and the average ratio or calibration factor can be used in place of a calibration curve.

7.4 Internal standard calibration procedure—To use this approach, the analyst must select one or more internal standards that are similar in analytical behavior to the compounds of interest. The analyst must further demonstrate that the measurement of the internal standard is not affected by method or matrix interferences. Because of these limitations, no internal standard can be suggested that is applicable to all samples. The compounds recommended for use as surrogate spikes in Section 8.7 have been used successfully as internal standards, because of their generally unique retention times.

7.4.1 Prepare calibration standards at a minimum of three concentration levels for each parameter of interest as described in Section 7.3.1.

7.4.2 Prepare a spiking solution containing each of the internal standards using the procedures described in Sections 6.5 and 6.6. It is recommended that the secondary dilution standard be prepared at a concentration of 15 µg/mL of each internal standard compound. The addition of 10 µL of this standard to 5.0 mL of sample or calibration standard would be equivalent to 30 µg/L.

7.4.3 Analyze each calibration standard according to Section 10, adding 10 µL of internal standard spiking solution directly to the syringe (Section 10.4). Tabulate peak height or area responses against concentration for each compound and internal standard, and calculate response factors (RF) for each compound using Equation 1.

Equation 1.

$$RF = \frac{(A_s)(C_{is})}{(A_{is})(C_s)}$$

where:

A_s = Response for the parameter to be measured.

A_{is} = Response for the internal standard.

C_{is} = Concentration of the internal standard.

C_s = Concentration of the parameter to be measured.

If the RF value over the working range is a constant (<10% RSD), the RF can be assumed to be invariant and the average RF can be used for calculations. Alternatively, the results can be used to plot a calibration curve of response ratios, A_s/A_{is}, vs. RF.

7.5 The working calibration curve, calibration factor, or RF must be verified on each working day by the measurement of a QC check sample.

7.5.1 Prepare the QC check sample as described in Section 8.2.2.

7.5.2 Analyze the QC check sample according to Section 10.

7.5.3 For each parameter, compare the response (Q) with the corresponding calibration acceptance criteria found in Table 2. If the responses for all parameters of interest fall within the designated ranges, analysis of actual samples can begin. If any individual Q falls outside the range, proceed according to Section 7.5.4.

Note: The large number of parameters in Table 2 present a substantial probability that one or more will not meet the calibration acceptance criteria when all parameters are analyzed.

7.5.4 Repeat the test only for those parameters that failed to meet the calibration acceptance criteria. If the response for a parameter does not fall within the range in this second test, a new calibration curve, calibration factor, or RF must be prepared for that parameter according to Section 7.3 or 7.4.

8. Quality Control

8.1 Each laboratory that uses this method is required to operate a formal quality control program. The minimum requirements of this program consist of an initial demonstration of laboratory capability and an ongoing analysis of spiked samples to evaluate and document data quality. The laboratory must maintain records to document the quality of data that is generated. Ongoing data quality checks are compared with established performance criteria to determine if the results of analyses meet the performance characteristics of the method. When results of sample spikes indicate atypical method performance, a quality control check standard must be analyzed to confirm that the measurements were performed in an in-control mode of operation.

8.1.1 The analyst must make an initial, one-time, demonstration of the ability to generate acceptable accuracy and precision with this method. This ability is established as described in Section 8.2.

8.1.2 In recognition of advances that are occurring in chromatography, the analyst is permitted certain options (detailed in Section 10.1) to improve the separations or lower the cost of measurements. Each time such a modification is made to the method, the analyst is required to repeat the procedure in Section 8.2.

8.1.3 Each day, the analyst must analyze a reagent water blank to demonstrate that interferences from the analytical system are under control.

8.1.4 The laboratory must, on an ongoing basis, spike and analyze a minimum of 10% of all samples to monitor and evaluate laboratory data quality. This procedure is described in Section 8.3.

8.1.5 The laboratory must, on an ongoing basis, demonstrate through the analyses of quality control check standards that the operation of the measurement system is in control. This procedure is described in Section 8.4. The frequency of the check standard analyses is equivalent to 10% of all samples analyzed but may be reduced if spike recoveries from samples (Section 8.3) meet all specified quality control criteria.

8.1.6 The laboratory must maintain performance records to document the quality of data that is generated. This procedure is described in Section 8.5.

8.2 To establish the ability to generate acceptable accuracy and precision, the analyst must perform the following operations.

8.2.1 A quality control (QC) check sample concentrate is required containing each parameter of interest at a concentration of 10 µg/mL in methanol. The QC check sample concentrate must be obtained from the U.S. Environmental Protection Agency, Environmental Monitoring and Support Laboratory in Cincinnati, Ohio, if available. If not available from that source, the QC check sample concentrate must be obtained from another external source. If not available from either source above, the QC check sample concentrate must be prepared by the laboratory using stock standards prepared independently from those used for calibration.

8.2.2 Prepare a QC check sample to contain 20 µg/L of each parameter by adding 200 µL of QC check sample concentrate to 100 mL of reagent water.

8.2.3 Analyze four 5-mL aliquots of the well-mixed QC check sample according to Section 10.

8.2.4 Calculate the average recovery ($\bar{X}$) in µg/L, and the standard deviation of the recovery (s) in µg/L, for each parameter of interest using the four results.

8.2.5 For each parameter compare s and $\bar{X}$ with the corresponding acceptance criteria for precision and accuracy, respectively, found in Table 2. If s and $\bar{X}$ for all parameters of interest meet the acceptance criteria, the system performance is acceptable and analysis of actual samples can begin. If any individual s exceeds the precision limit or any individual $\bar{X}$ falls outside the range for accuracy, then the system performance is unacceptable for that parameter.

Note: The large number of parameters in Table 2 present a substantial probability that one or more will fail at least one of the acceptance criteria when all parameters are analyzed.

8.2.6 When one or more of the parameters tested fail at least one of the acceptance

AR301260

criteria, the analyst must proceed according to Section 8.2.6.1 or 8.2.6.2.

8.2.6.1 Locate and correct the source of the problem and repeat the test for all parameters of interest beginning with Section 8.2.3.

8.2.6.2 Beginning with Section 8.2.3, repeat the test only for those parameters that failed to meet criteria. Repeated failure, however, will confirm a general problem with the measurement system. If this occurs, locate and correct the source of the problem and repeat the test for all compounds of interest beginning with Section 8.2.3.

8.3 The laboratory must, on an ongoing basis, spike at least 10% of the samples from each sample site being monitored to assess accuracy. For laboratories analyzing one to ten samples per month, at least one spiked sample per month is required.

8.3.1 The concentration of the spike in the sample should be determined as follows:

8.3.1.1 If, as in compliance monitoring, the concentration of a specific parameter in the sample is being checked against a regulatory concentration limit, the spike should be at that limit or 1 to 5 times higher than the background concentration determined in Section 8.3.2, whichever concentration would be larger.

8.3.1.2 If the concentration of a specific parameter in the sample is not being checked against a limit specific to that parameter, the spike should be at 20 µg/L or 1 to 5 times higher than the background concentration determined in Section 8.3.2, whichever concentration would be larger.

8.3.2 Analyze one 5-mL sample aliquot to determine the background concentration (B) of each parameter. If necessary, prepare a new QC check sample concentrate (Section 8.2.1) appropriate for the background concentrations in the sample. Spike a second 5-mL sample aliquot with 10 µL of the QC check sample concentrate and analyze it to determine the concentration after spiking (A) of each parameter. Calculate each percent recovery (P) as 100(A–B)%/T, where T is the known true value of the spike.

8.3.3 Compare the percent recovery (P) for each parameter with the corresponding QC acceptance criteria found in Table 2. These acceptance criteria were calculated to include an allowance for error in measurement of both the background and spike concentrations, assuming a spike to background ratio of 5:1. This error will be accounted for to the extent that the analyst's spike to background ratio approaches 5:1.[7] If spiking was performed at a concentration lower than 20 µg/L, the analyst must use either the QC acceptance criteria in Table 2, or optional QC acceptance criteria calculated for the specific spike concentration. To calculate optional acceptance criteria for the recovery of a parameter: (1) Calculate accuracy (X') using the equation in Table 3, substituting the spike concentration (T) for C; (2) calculate overall precision (S') using the equation in Table 3, substituting X' for $\bar{X}$; (3) calculate the range for recovery at the spike concentration as (100 X'/T)±2.44(100 S'/T)%.[7]

8.3.4 If any individual P falls outside the designated range for recovery, that parameter has failed the acceptance criteria. A check standard containing each parameter that failed the criteria must be analyzed as described in Section 8.4.

8.4 If any parameter fails the acceptance criteria for recovery in Section 8.3, a QC check standard containing each parameter that failed must be prepared and analyzed.

Note: The frequency for the required analysis of a QC check standard will depend upon the number of parameters being simultaneously tested, the complexity of the sample matrix, and the performance of the laboratory. If the entire list of parameters in Table 2 must be measured in the sample in Section 8.3, the probability that the analysis of a QC check standard will be required is high. In this case the QC check standard should be routinely analyzed with the spiked sample.

8.4.1 Prepare the QC check standard by adding 10 µL of QC check sample concentrate (Sections 8.2.1 or 8.3.2) to 5 mL of reagent water. The QC check standard needs only to contain the parameters that failed criteria in the test in Section 8.3.

8.4.2 Analyze the QC check standard to determine the concentration measured (A) of each parameter. Calculate each percent recovery (P_s) as 100 (A/T)%, where T is the true value of the standard concentration.

8.4.3 Compare the percent recovery (P_s) for each parameter with the corresponding QC acceptance criteria found in Table 2. Only parameters that failed the test in Section 8.3 need to be compared with these criteria. If the recovery of any such parameter falls outside the designated range, the laboratory performance for that parameter is judged to be out of control, and the problem must be immediately identified and corrected. The analytical result for that parameter in the unspiked sample is suspect and may not be reported for regulatory compliance purposes.

8.5 As part of the QC program for the laboratory, method accuracy for wastewater samples must be assessed and records must be maintained. After the analysis of five spiked wastewater samples as in Section 8.3, calculate the average percent recovery ($\bar{P}$) and the standard deviation of the percent recovery (s_p). Express the accuracy assessment as a percent recovery interval from $\bar{P}-2s_p$ to $\bar{P}+2s_p$. If $\bar{p}=90\%$ and $s_p=10\%$, for example, the accuracy interval is expressed as 70–110%. Update the accuracy assessment for each parameter on a regular basis (e.g. after each five to ten new accuracy measurements).

8.6 It is recommended that the laboratory adopt additional quality assurance practices for use with this method. The specific practices that are most productive depend upon the needs of the laboratory and the nature of the samples. Field duplicates may be analyzed to assess the precision of the environmental measurements. When doubt exists over the identification of a peak on the chromatogram, confirmatory techniques such as gas chromatography with a dissimilar column, specific element detector, or mass spectrometer must be used. Whenever possible, the laboratory should analyze standard reference materials and participate in relevant performance evaluation studies.

8.7 The analyst should monitor both the performance of the analytical system and the effectiveness of the method in dealing with each sample matrix by spiking each sample, standard, and reagent water blank with surrogate halocarbons. A combination of bromochloromethane, 2-bromo-1-chloropropane, and 1,4-dichlorobutane is recommended to encompass the range of the temperature program used in this method. From stock standard solutions prepared as in Section 6.5, add a volume to give 750 µg of each surrogate to 45 mL of reagent water contained in a 50-mL volumetric flask, mix and dilute to volume for a concentration of 15 ng/µL. Add 10 µL of this surrogate spiking solution directly into the 5-mL syringe with every sample and reference standard analyzed. Prepare a fresh surrogate spiking solution on a weekly basis. If the internal standard calibration procedure is being used, the surrogate compounds may be added directly to the internal standard spiking solution (Section 7.4.2).

9. Sample Collection, Preservation, and Handling

9.1 All samples must be iced or refrigerated from the time of collection until analysis. If the sample contains free or combined chlorine, add sodium thiosulfate preservative (10 mg/40 mL is sufficient for up to 5 ppm Cl_2) to the empty sample bottle just prior to shipping to the sampling site. EPA Methods 330.4 and 330.5 may be used for measurement of residual chlorine.[8] Field test kits are available for this purpose.

9.2 Grab samples must be collected in glass containers having a total volume of at least 25 mL. Fill the sample bottle just to overflowing in such a manner that no air bubbles pass through the sample as the bottle is being filled. Seal the bottle so that no air bubbles are entrapped in it. If preservative has been added, shake vigorously for 1 min. Maintain the hermetic seal on the sample bottle until time of analysis.

9.3 All samples must be analyzed within 14 days of collection.[8]

10. Procedure

10.1 Table 1 summarizes the recommended operating conditions for the gas chromatograph. Included in this table are estimated retention times and MDL that can be achieved under these conditions. An example of the separations achieved by Column 1 is shown in Figure 5. Other packed columns, chromatographic conditions, or detectors may be used if the requirements of Section 8.2 are met.

10.2 Calibrate the system daily as described in Section 7.

10.3 Adjust the purge gas (nitrogen or helium) flow rate to 40 mL/min. Attach the trap inlet to the purging device, and set the purge and trap system to purge (Figure 3). Open the syringe valve located on the purging device sample introduction needle.

10.4 Allow the sample to come to ambient temperature prior to introducing it to the syringe. Remove the plunger from a 5-mL syringe and attach a closed syringe valve. Open the sample bottle (or standard) and carefully pour the sample into the syringe barrel to just short of overflowing. Replace the syringe plunger and compress the sample. Open the syringe valve and vent any residual

air while adjusting the sample volume to 5.0 mL. Since this process of taking an aliquot destroys the validity of the sample for future analysis, the analyst should fill a second syringe at this time to protect against possible loss of data. Add 10.0 µL of the surrogate spiking solution (Section 8.7) and 10.0 µL of the internal standard spiking solution (Section 7.4.2), if applicable, through the valve bore, then close the valve.

10.5 Attach the syringe-syringe valve assembly to the syringe valve on the purging device. Open the syringe valves and inject the sample into the purging chamber.

10.6 Close both valves and purge the sample for 11.0±0.1 min at ambient temperature.

10.7 After the 11-min purge time, attach the trap to the chromatograph, adjust the purge and trap system to the desorb mode (Figure 4), and begin to temperature program the gas chromatograph. Introduce the trapped materials to the GC column by rapidly heating the trap to 180 °C while backflushing the trap with an inert gas between 20 and 60 mL/min for 4 min. If rapid heating of the trap cannot be achieved, the GC column must be used as a secondary trap by cooling it to 30 °C (subambient temperature, if poor peak geometry or random retention time problems persist) instead of the initial program temperature of 45 °C

10.8 While the trap is being desorbed into the gas chromatograph, empty the purging chamber using the sample introduction syringe. Wash the chamber with two 5-mL flushes of reagent water.

10.9 After desorbing the sample for 4 min, condition the trap by returning the purge and trap system to the purge mode. Wait 15 s then close the syringe valve on the purging device to begin gas flow through the trap. The trap temperature should be maintained at 180 °C After approximately 7 min, turn off the trap heater and open the syringe valve to stop the gas flow through the trap. When the trap is cool, the next sample can be analyzed.

10.10 Identify the parameters in the sample by comparing the retention times of the peaks in the sample chromatogram with those of the peaks in standard chromatograms. The width of the retention time window used to make identifications should be based upon measurements of actual retention time variations of standards over the course of a day. Three times the standard deviation of a retention time for a compound can be used to calculate a suggested window size; however, the experience of the analyst should weigh heavily in the interpretation of chromatograms.

10.11 If the response for a peak exceeds the working range of the system, prepare a dilution of the sample with reagent water from the aliquot in the second syringe and reanalyze.

11. Calculations

11.1 Determine the concentration of individual compounds in the sample.

11.1.1 If the external standard calibration procedure is used, calculate the concentration of the parameter being measured from the peak response using the calibration curve or calibration factor determined in Section 7.3.2.

11.1.2 If the internal standard calibration procedure is used, calculate the concentration in the sample using the response factor (RF) determined in Section 7.4.3 and Equation 2

Equation 2.

$$\text{Concentration } (\mu g/L) = \frac{(A_s)(C_{is})}{(A_{is})(RF)}$$

where:

A_s = Response for the parameter to be measured.

A_{is} = Response for the internal standard.

C_{is} = Concentration of the internal standard.

11.2 Report results in µg/L without correction for recovery data. All QC data obtained should be reported with the sample results.

12. Method Performance

12.1 The method detection limit (MDL) is defined as the minimum concentration of a substance that can be measured and reported with 99% confidence that the value is above zero.[1] The MDL concentrations listed in Table 1 were obtained using reagent water.[9] Similar results were achieved using representative wastewaters. The MDL actually achieved in a given analysis will vary depending on instrument sensitivity and matrix effects.

12.2 This method is recommended for use in the concentration range from the MDL to 1000×MDL. Direct aqueous injection techniques should be used to measure concentration levels above 1000×MDL.

12.3 This method was tested by 20 laboratories using reagent water, drinking water, surface water, and three industrial wastewaters spiked at six concentrations over the range 8.0 to 500 µg/L.[9] Single operator precision, overall precision, and method accuracy were found to be directly related to the concentration of the parameter and essentially independent of the sample matrix. Linear equations to describe these relationships are presented in Table 3.

References

1. 40 CFR Part 136, Appendix B.
2. Bellar, T.A., and Lichtenberg, J.J. "Determining Volatile Organics at Microgram-per-Litre-Levels by Gas Chromatography," *Journal of the American Water Works Association*, 66, 739 (1974).
3. Bellar, T.A., and Lichtenberg, J.J. "Semi-Automated Headspace Analysis of Drinking Waters and Industrial Waters for Purgeable Volatile Organic Compounds," Proceedings from Symposium on Measurement of Organic Pollutants in Water and Wastewater, American Society for Testing and Materials, STP 686, C.E. Van Hall, editor, 1978.
4. "Carcinogens—Working With Carcinogens," Department of Health, Education, and Welfare, Public Health Service, Center for Disease Control, National Institute for Occupational Safety and Health, Publication No. 77-206, August 1977.
5. "OSHA Safety and Health Standards, General Industry" (29 CFR 1910), Occupational Safety and Health Administration, OSHA 2206 (Revised, January 1976).
6. "Safety in Academic Chemistry Laboratories," American Chemical Society Publication, Committee on Chemical Safety, 3rd Edition, 1979.
7. Provost, L.P., and Elder, R.S. "Interpretation of Percent Recovery Data," *American Laboratory*, 15, 58-63 (1983). (The value 2.44 used in the equation in Section 8.3.3 is two times the value 1.22 derived in this report.)
8. "Methods 330.4 (Titrimetric, DPD-FAS) and 330.5 (Spectrophotometric, DPD) for Chlorine, Total Residual," Methods for Chemical Analysis of Water and Wastes, EPA 600/4-79-020, U.S. Environmental Protection Agency, Environmental Monitoring and Support Laboratory, Cincinnati, Ohio 45268, March 1979.
9. "EPA Method Validation Study 23, Method 601 (Purgeable Halocarbons)," Report for EPA Contract 68-03-2856 (in preparation).
10. "Method Validation Data for EPA Method 601," Memorandum from B. Potter, U.S. Environmental Protection Agency, Environmental Monitoring and Support Laboratory, Cincinnati, Ohio 45268, November 10, 1983.

TABLE 1.—CHROMATOGRAPHIC CONDITIONS AND METHOD DETECTION LIMITS

Parameter	Retention time (min)		Method detection limit (µg/L)
	Column 1	Column 2	
Chloromethane	1.50	5.38	0.08
Bromomethane	2.17	7.06	1.18
Dichlorodifluoromethane	2.68	nd	1.83
Vinyl chloride	2.67	5.60	0.12
Chloroethane	3.33	8.38	0.65
Methylene chloride	5.28	10.51	0.28
Trichlorofluoromethane	7.18	nd	nd
1,1-Dichloroethane	7.89	7.72	0.13
1,1-Dichloroethane	9.20	12.8	0.07
trans-1,2-Dichloroethane	10.1	8.38	0.19

R30 1262

TABLE 1.—CHROMATOGRAPHIC CONDITIONS AND METHOD DETECTION LIMITS—Continued

Parameter	Retention time (min)		Method detection limit (µg/L)
	Column 1	Column 2	
Chloroform	10.7	12.1	0.05
1,2-Dichloroethane	11.4	15.4	0.03
1,1,1-Trichloroethane	12.6	13.1	0.03
Carbon tetrachloride	13.0	14.4	0.12
Bromodichloromethane	13.7	14.6	0.10
1,2-Dichloropropane	14.5	16.6	0.04
cis-1,3-Dichloropropene	15.2	16.6	0.34
Trichloroethene	15.8	13.1	0.12
Dibromochloromethane	16.5	16.6	0.09
1,1,2-Trichloroethane	16.5	18.1	0.02
trans-1,3-Dichloropropene	16.5	16.0	0.20
2-Chloroethylvinyl ether	18.0	nd	0.13
Bromoform	19.2	19.2	0.20
1,1,2,2-Tetrachloroethane	21.6	nd	0.03
Tetrachloroethene	21.7	15.0	0.03
Chlorobenzene	24.2	16.8	0.25
1,3-Dichlorobenzene	34.0	22.4	0.32
1,2-Dichlorobenzene	34.9	23.6	0.15
1,4-Dichlorobenzene	35.4	22.3	0.24

Column 1 conditions: Carbopack B (80/90 mesh) coated with 1% SP-1000 packed in an 8 ft x 0.1 in. ID stainless steel or glass column with helium carrier gas at 40 mL/min flow rate. Column temperature held at 45 °C for 3 min then programmed at 8 °C/min to 220 °C and held for 15 min.

Column 2 conditions: Porapak-Q (100/120 mesh) coated with n-octane packed in a 6 ft x 0.1 in. ID stainless steel or glass column with helium carrier gas at 40 mL/min flow rate. Column temperature held at 50 °C for 3 min then programmed at 8 °C/min to 170 °C and held for 4 min.

nd = not determined.

TABLE 2.—CALIBRATION AND QC ACCEPTANCE CRITERIA—METHOD 601 *

Parameter	Range for C (µg/L)	Limit for s (µg/L)	Range for X̄ (µg/L)	Range for P, P_s (%)
Bromodichloromethane	15.2-24.8	4.3	10.7-32.0	42-172
Bromoform	14.7-25.3	4.7	5.0-25.3	13-159
Bromomethane	11.7-28.3	7.6	2.4-34.6	D-144
Carbon tetrachloride	13.7-26.3	5.6	11.8-25.3	43-143
Chlorobenzene	14.4-25.6	5.0	10.2-27.4	36-150
Chloroethane	15.4-24.6	4.4	11.3-25.2	44-137
2-Chloroethylvinyl ether	12.0-28.0	6.3	4.6-35.5	14-186
Chloroform	15.0-25.0	4.5	12.4-24.6	49-133
Chloromethane	11.8-28.1	7.4	D-34.9	D-183
Dibromochloromethane	13.1-26.9	6.3	7.9-36.1	24-181
1,2-Dichlorobenzene	14.0-26.0	5.5	1.7-38.9	D-208
1,3-Dichlorobenzene	8.9-30.1	8.1	6.2-32.6	7-187
1,4-Dichlorobenzene	13.9-26.1	5.5	11.5-25.5	42-143
1,1-Dichloroethane	16.9-23.2	3.2	11.5-24.8	47-132
1,2-Dichloroethane	14.3-25.7	5.2	13.0-26.5	51-147
1,1-Dichloroethene	12.6-27.4	6.8	10.2-27.3	29-167
trans-1,2-Dichloroethene	12.6-27.2	6.4	11.4-27.1	39-155
1,2-Dichloropropane	14.9-25.2	5.2	10.1-29.8	44-156
cis-1,3-Dichloropropene	12.9-27.2	7.3	6.2-33.8	22-178
trans-1,3-Dichloropropene	12.9-27.2	7.3	6.2-33.8	22-178
Methylene chloride	15.9-24.5	4.0	7.0-27.8	25-162
1,1,2,2-Tetrachloroethane	9.9-30.2	8.2	6.6-31.8	8-184
Tetrachloroethene	14.0-26.0	5.4	8.1-29.9	26-162
1,1,1-Trichloroethane	14.2-25.8	4.9	10.9-24.8	41-138
1,1,2-Trichloroethane	15.7-24.3	3.9	9.9-25.4	39-136
Trichloroethene	15.4-24.6	4.2	8.2-26.8	35-146
Trichlorofluoromethane	13.9-26.7	6.0	7.4-28.1	21-156
Vinyl chloride	13.7-26.3	5.7	6.2-29.9	29-163

C = Concentration measured in QC check sample, in µg/L (Section 7.5.3).
s = Standard deviation of four recovery measurements, in µg/L (Section 8.2.4).
X̄ = Average recovery for four recovery measurements, in µg/L (Section 8.2.4).
P, P_s = Percent recovery measured (Section 8.3.2, Section 8.4.2).
D = Detected; result must be greater than zero.
* Criteria were calculated assuming a QC check sample concentration of 20 µg/L.

Note: These criteria are based directly upon the method performance data in Table 3. Where necessary, the limits for recovery have been broadened to assure applicability of the limits to concentrations below those used to develop Table 3.

TABLE 3.—METHOD ACCURACY AND PRECISION AS FUNCTIONS OF CONCENTRATION—METHOD 601

Parameter	Accuracy, as recovery, X̄' (µg/L)	Single analyst precision, s' (µg/L)	Overall precision, S' (µg/L)
Bromodichloromethane	1.12C−1.02	0.11X̄+0.04	0.20X̄+1.00
Bromoform	0.98C−2.06	0.12X̄−0.58	0.21X̄+0.41
Bromomethane	0.78C−1.27	0.26X̄+0.27	0.36X̄+0.84
Carbon tetrachloride	0.98C−1.04	0.15X̄+0.39	0.30X̄+0.36
Chlorobenzene	1.00C−1.23	0.13X̄−0.07	0.18X̄+1.21
Chloroethane	0.99C−1.53	0.14X̄−0.13	0.17X̄+0.63
2-Chloroethylvinyl ether*	1.00C	0.20X̄	0.36X̄
Chloroform	0.93C−0.39	0.13X̄+0.16	0.18X̄−0.02
Chloromethane	0.77C+0.16	0.36X̄−0.31	0.52X̄+1.31
Dibromochloromethane	0.94C+2.72	0.11X̄+1.10	0.24X̄+1.88
1,2-Dichlorobenzene	0.93C+1.70	0.20X̄+0.87	0.13X̄+6.15

AR301263

AR301263

TABLE 3.—METHOD ACCURACY AND PRECISION AS FUNCTIONS OF CONCENTRATION—METHOD 601—Continued

Parameter	Accuracy, as recovery, $\bar{X}'$ (µg/L)	Single analyst precision, s_r' (µg/L)	Overall precision, S' (µg/L)
1,3-Dichlorobenzene	0.95C+0.43	0.14$\hat{X}$+2.33	0.26$\hat{X}$+2.34
1,4-Dichlorobenzene	0.93C−0.09	0.15$\hat{X}$+0.29	0.20$\hat{X}$+0.41
1,1-Dichloroethane	0.95C−1.08	0.08$\hat{X}$+0.17	0.14$\hat{X}$+0.94
1,2-Dichloroethane	1.04C−1.08	0.11$\hat{X}$+0.70	0.15$\hat{X}$+0.94
1,1-Dichloroethene	0.98C−0.87	0.21$\hat{X}$−0.23	0.29$\hat{X}$−0.40
trans-1,2-Dichloroethene	0.97C−0.18	0.11$\hat{X}$+1.46	0.17$\hat{X}$+1.48
1,2-Dichloropropane*	1.00C	0.13$\hat{X}$	0.23$\hat{X}$
cis-1,3-Dichloropropene*	1.00C	0.18$\hat{X}$	0.32$\hat{X}$
trans-1,3-Dichloropropene*	1.00C	0.18$\hat{X}$	0.32$\hat{X}$
Methylene chloride	0.91C−0.83	0.11$\hat{X}$+0.33	0.21$\hat{X}$+1.43
1,1,2,2-Tetrachloroethane	0.95C+0.19	0.14$\hat{X}$+2.41	0.23$\hat{X}$+2.79
Tetrachloroethene	0.94C+0.06	0.14$\hat{X}$+0.38	0.18$\hat{X}$+2.21
1,1,1-Trichloroethane	0.90C−0.18	0.15$\hat{X}$+0.06	0.20$\hat{X}$+0.37
1,1,2-Trichloroethane	0.96C+0.30	0.13$\hat{X}$−0.14	0.19$\hat{X}$+0.87
Trichloroethene	0.87C+0.48	0.13$\hat{X}$−0.03	0.22$\hat{X}$−0.30
Trichlorofluoromethane	0.89C−0.07	0.15$\hat{X}$+0.67	0.26$\hat{X}$+0.91
Vinyl chloride	0.87C−0.36	0.13$\hat{X}$+0.68	0.27$\hat{X}$+0.40

$\hat{X}$ = Expected recovery for one or more measurements of a sample containing a concentration of C, in µg/L.
s_r' = Expected single analyst standard deviation of measurements at an average concentration found of $\bar{X}$, in µg/L.
S' = Expected interlaboratory standard deviation of measurements at an average concentration found of $\bar{X}$, in µg/L.
C = True value for the concentration, in µg/L.
$\bar{X}$ = Average recovery found for measurements of samples containing a concentration of C, in µg/L.
* Estimates based upon the performance in a single laboratory.[16]

BILLING CODE 6560-50-M

AR301264

A

METHOD DETECTION LIMITS

601

Table 1. Chromatographic Conditions and Method Detection Limits

Parameter	Retention Time (min.) Column 1	Retention Time (min.) Column 2	Method Detection Limit µg/L
Chloromethane	1.50	5.28	0.08
Bromomethane	2.17	7.05	1.18
Dichlorodifluoromethane	2.62	nd	1.81
Vinyl chloride	2.67	5.28	0.18
Chloroethane	3.33	8.68	0.52
Methylene chloride	5.25	10.1	0.25
Trichlorofluoromethane	7.18	nd	nd
1,1-Dichloroethene	7.93	7.72	0.13
1,1-Dichloroethane	9.30	12.6	0.07
trans-1,2-Dichloroethene	10.1	9.38	0.10
Chloroform	10.7	12.1	0.05
1,2-Dichloroethane	11.4	15.4	0.03
1,1,1-Trichloroethane	12.6	13.1	0.03
Carbon tetrachloride	13.0	14.4	0.12
Bromodichloromethane	13.7	14.6	0.10
1,2-Dichloropropane	14.9	16.6	0.04
trans-1,3-Dichloropropene	15.2	16.6	0.34
Trichloroethene	15.8	13.1	0.12
Dibromochloromethane	16.5	16.6	0.09
1,1,2-Trichloroethane	16.5	18.1	0.02
cis-1,3-Dichloropropene	16.5	18.0	0.20
2-Chloroethylvinyl ether	18.0	nd	0.13
Bromoform	19.2	19.2	0.20
1,1,2,2-Tetrachloroethane	21.6	nd	0.03
Tetrachloroethene	21.7	16.0	0.03
Chlorobenzene	24.2	18.8	0.25
1,3-Dichlorobenzene	34.0	22.4	0.32
1,2-Dichlorobenzene	34.9	23.5	0.15
1,4-Dichlorobenzene	35.4	22.3	0.24

nd = not determined

Column 1 conditions: Carbopack B 60/80 mesh coated with 1% SP-1000 packed in an 8 ft × 0.1 in ID stainless steel or glass column with helium carrier gas at 40 mL/min flow rate. Column temperature held at 45°C for 3 min. then programmed at 8°C/min. to 220° and held for 15 min.

Column 2 conditions: Porasil-C 100/120 mesh coated with n-octane packed in a 6 ft × 0.1 in ID stainless steel or glass column with helium carrier gas at 40 mL/min flow rate. Column temperature held at 50°C for 3 min then programmed at 6°C/min to 170° and held for 4 min.

B

PRECISION DESIRED

601

TABLE 3.—METHOD ACCURACY AND PRECISION AS FUNCTIONS OF CONCENTRATION—METHOD 601

Parameter	Accuracy, as recovery, $\bar{X}'$ (µg/L)	Single analyst precision, s_r' (µg/L)	Overall precision, S' (µg/L)
Bromodichloromethane	1.12C−1.02	0.11$\bar{X}$+0.04	0.20$\bar{X}$+1.00
Bromoform	0.88C−2.05	0.12$\bar{X}$+0.58	0.21$\bar{X}$+2.41
Bromomethane	0.78C−1.27	0.28$\bar{X}$+0.27	0.36$\bar{X}$+0.94
Carbon tetrachloride	0.88C−1.04	0.15$\bar{X}$+0.38	0.20$\bar{X}$+0.39
Chlorobenzene	1.00C−1.23	0.15$\bar{X}$−0.02	0.18$\bar{X}$+1.21
Chloroethane	0.88C−1.53	0.14$\bar{X}$−0.13	0.17$\bar{X}$+0.63
2-Chloroethylvinyl ether*	1.00C	0.20$\bar{X}$	0.36$\bar{X}$
Chloroform	0.83C−0.38	0.13$\bar{X}$+0.16	0.18$\bar{X}$−0.08
Chloromethane	0.77C+0.18	0.28$\bar{X}$−0.31	0.52$\bar{X}$+1.31
Dibromochloromethane	0.94C+2.72	0.11$\bar{X}$+1.10	0.24$\bar{X}$+1.88
1,2-Dichlorobenzene	0.83C+1.70	0.20$\bar{X}$+0.87	0.13$\bar{X}$+6.13
1,3-Dichlorobenzene	0.95C+0.43	0.14$\bar{X}$+2.33	0.26$\bar{X}$+2.34
1,4-Dichlorobenzene	0.83C−0.08	0.15$\bar{X}$+0.28	0.20$\bar{X}$+0.41
1,1-Dichloroethane	0.95C−1.08	0.08$\bar{X}$+0.17	0.14$\bar{X}$+0.94
1,2-Dichloroethane	1.04C−1.08	0.11$\bar{X}$+0.70	0.15$\bar{X}$+0.94
1,1-Dichloroethene	0.88C−0.87	0.21$\bar{X}$−0.23	0.29$\bar{X}$−0.40
trans-1,2-Dichloroethene	0.87C−0.18	0.11$\bar{X}$+1.46	0.17$\bar{X}$+1.46
1,2-Dichloropropane*	1.00C	0.13$\bar{X}$	0.23$\bar{X}$
cis-1,3-Dichloropropene*	1.00C	0.18$\bar{X}$	0.32$\bar{X}$
trans-1,3 Dichloropropene*	1.00C	0.18$\bar{X}$	0.32$\bar{X}$
Methylene chloride	0.81C−0.83	0.11$\bar{X}$+0.33	0.21$\bar{X}$+1.43
1,1,2,2-Tetrachloroethane	0.96C+0.18	0.14$\bar{X}$+2.41	0.23$\bar{X}$+2.79
Tetrachloroethene	0.94C+0.08	0.14$\bar{X}$+0.38	0.18$\bar{X}$+2.21
1,1,1-Trichloroethane	0.90C−0.18	0.15$\bar{X}$+0.04	0.20$\bar{X}$+0.37
1,1,2-Trichloroethane	0.88C+0.30	0.13$\bar{X}$−0.14	0.19$\bar{X}$+0.67
Trichloroethene	0.87C+0.48	0.13$\bar{X}$−0.03	0.23$\bar{X}$+0.30
Trichlorofluoromethane	0.89C−0.07	0.15$\bar{X}$+0.67	0.26$\bar{X}$+0.91
Vinyl chloride	0.87C−0.38	0.13$\bar{X}$+0.65	0.27$\bar{X}$+0.40

$\bar{X}'$ = Expected recovery for one or more measurements of a sample containing a concentration of C, in µg/L.
s_r' = Expected single analyst standard deviation of measurements at an average concentration found of $\bar{X}$, in µg/L.
S' = Expected interlaboratory standard deviation of measurements at an average concentration found of $\bar{X}$, in µg/L.
C = True value for the concentration, in µg/L.
$\bar{X}$ = Average recovery found for measurements of samples containing a concentration of C, in µg/L.
* Estimates based upon the performance in a single laboratory.[10]

AR 301266

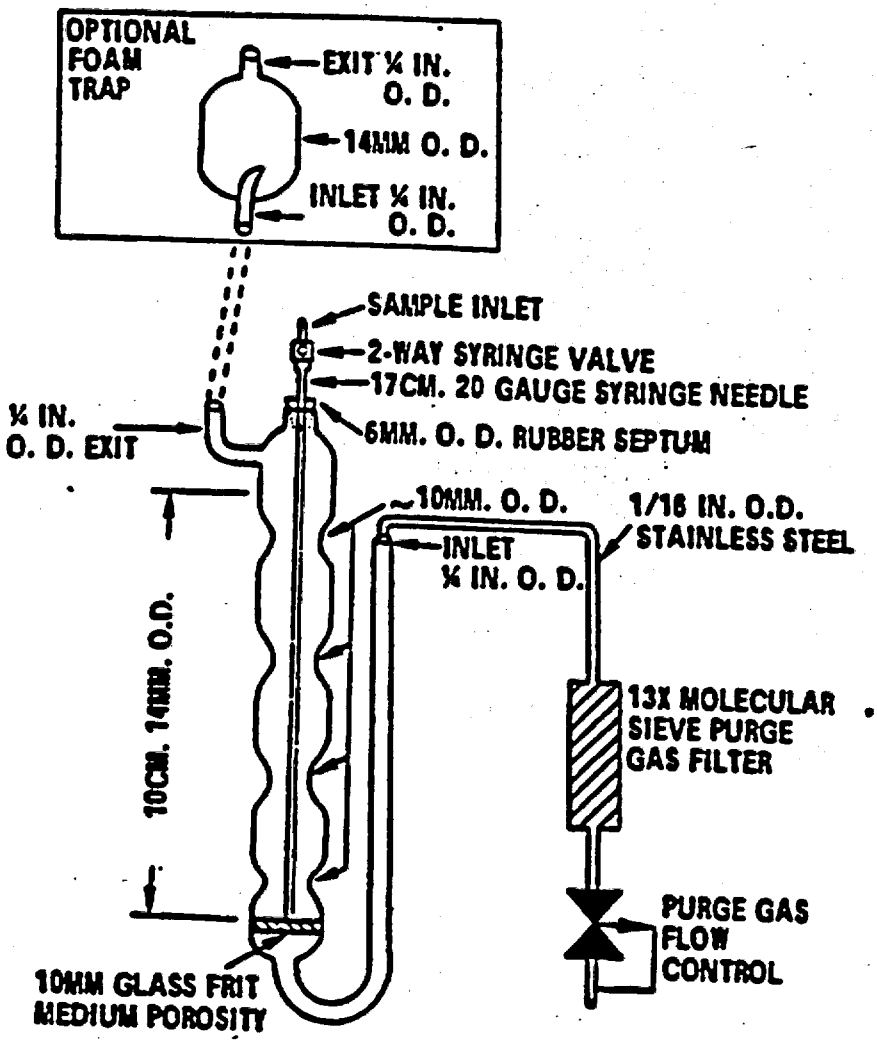

Figure 1. Purging device.

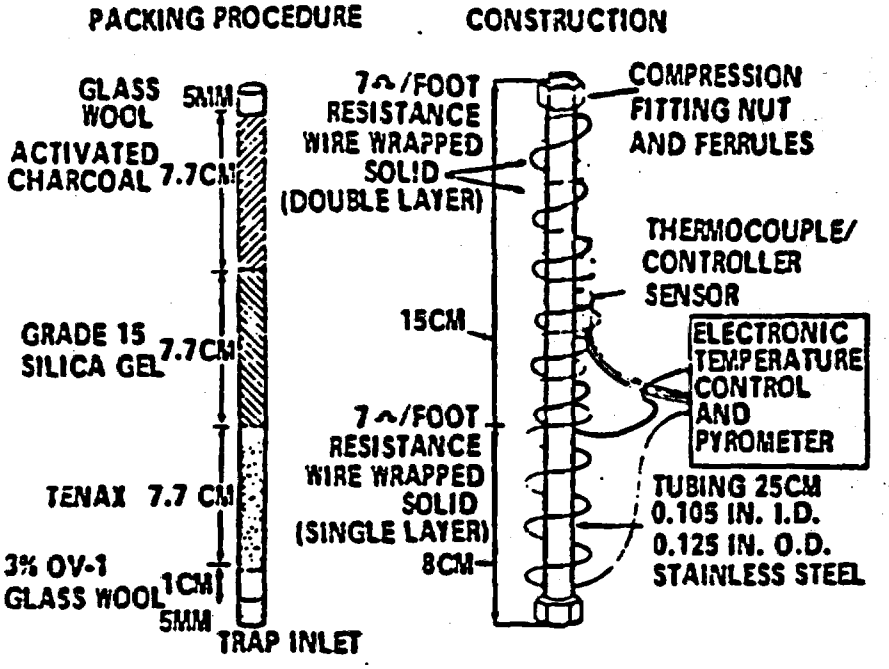

Figure 2. Trap packings and construction to include desorb capability

AR301268

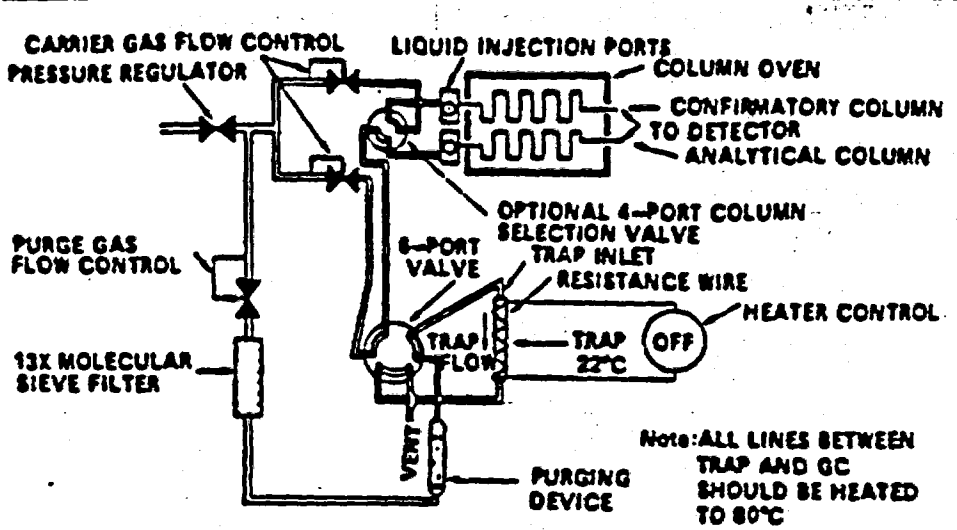

Figure 3. Purge and trap system-purge mode.

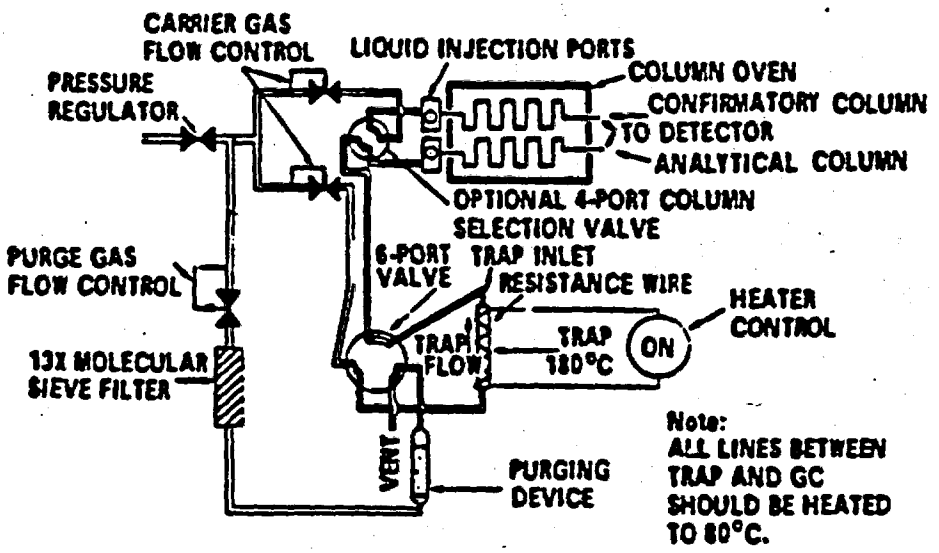

Figure 4. Purge and trap system - desorb mode.

AR301269

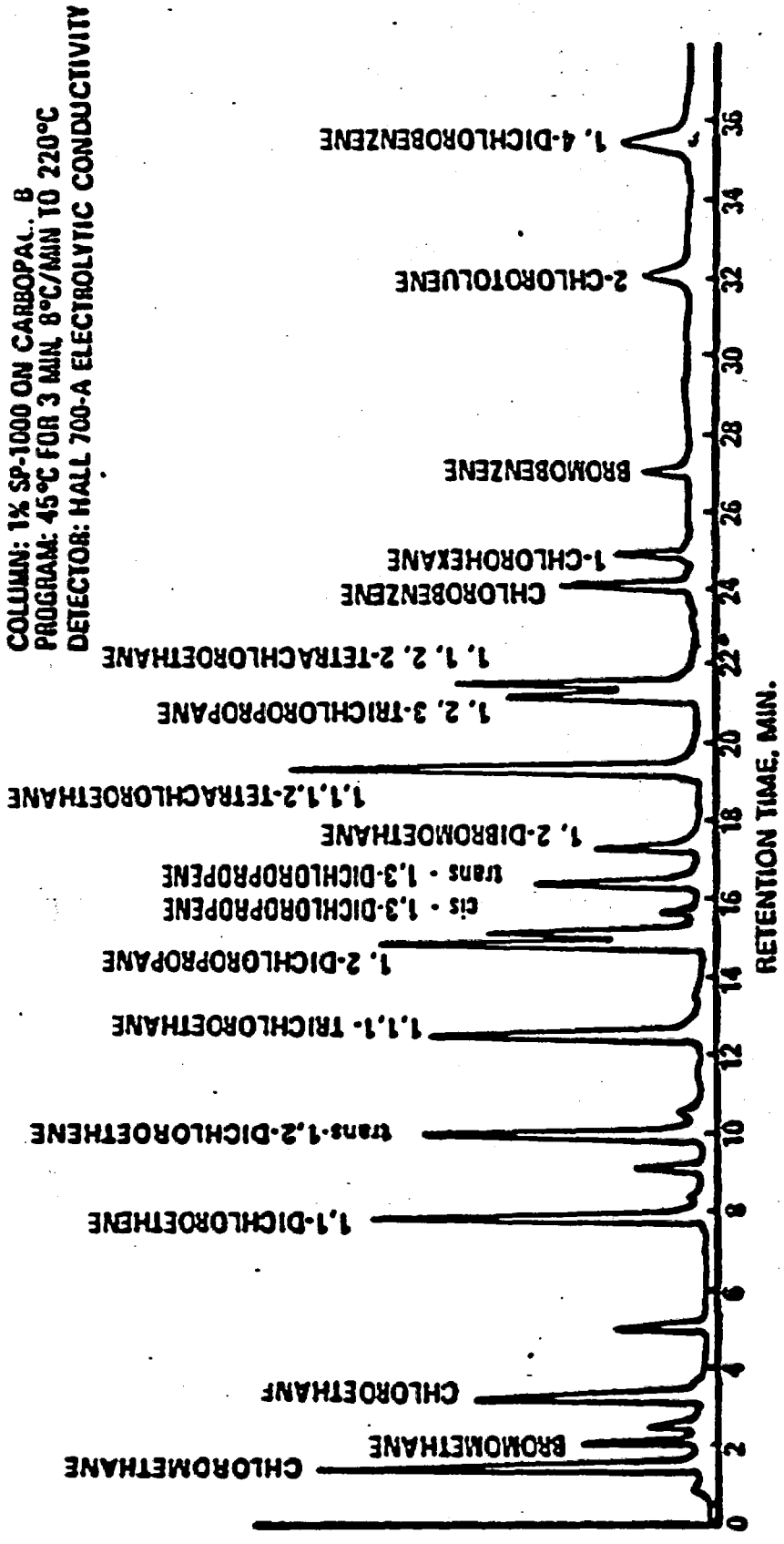

Figure 6. Gas chromatogram of purgeable halocarbons.

BILLING CODE 6560-50-C

AR301270

Method 602—Purgeable Aromatics

1. Scope and Application

1.1 This method covers the determination of various purgeable aromatics. The following parameters may be determined by this method:

Parameter	STORET No.	CAS No.
Benzene	34030	71-43-2
Chlorobenzene	34301	108-90-7
1,2-Dichlorobenzene	34536	95-50-1
1,3-Dichlorobenzene	34566	541-73-1
1,4-Dichlorobenzene	34571	106-46-7
Ethylbenzene	34371	100-41-4
Toluene	34010	108-88-3

1.2 This is a purge and trap gas chromatographic (GC) method applicable to the determination of the compounds listed above in municipal and industrial discharges as provided under 40 CFR 136.1. When this method is used to analyze unfamiliar samples for any or all of the compounds above, compound identifications should be supported by at least one additional qualitative technique. This method describes analytical conditions for a second gas chromatographic column that can be used to confirm measurements made with the primary column. Method 624 provides gas chromatograph/mass spectrometer (GC/MS) conditions appropriate for the qualitative and quantitative confirmation of results for all of the parameters listed above.

1.3 The method detection limit (MDL, defined in Section 12.1)[1] for each parameter listed in Table 1. The MDL for a specific wastewater may differ from those listed, depending upon the nature of interferences in the sample matrix.

1.4 Any modification of this method, beyond those expressly permitted, shall be considered as a major modification subject to application and approval of alternate test procedures under 40 CFR 136.4 and 136.5.

1.5 This method is restricted to use by or under the supervision of analysts experienced in the operation of a purge and trap system and a gas chromatograph and in the interpretation of gas chromatograms. Each analyst must demonstrate the ability to generate acceptable results with this method using the procedure described in Section 8.2.

2. Summary of Method

2.1 An inert gas is bubbled through a 5-mL water sample contained in a specially-designed purging chamber at ambient temperature. The aromatics are efficiently transferred from the aqueous phase to the vapor phase. The vapor is swept through a sorbent trap where the aromatics are trapped. After purging is completed, the trap is heated and backflushed with the inert gas to desorb the aromatics onto a gas chromatographic column. The gas chromatograph is temperature programmed to separate the aromatics which are then detected with a photoionization detector.[2,3]

2.2 The method provides an optional gas chromatographic column that may be helpful in resolving the compounds of interest from interferences that may occur.

3. Interferences

3.1 Impurities in the purge gas and organic compounds outgassing from the plumbing ahead of the trap account for the majority of contamination problems. The analytical system must be demonstrated to be free from contamination under the conditions of the analysis by running laboratory reagent blanks as described in Section 8.1.3. The use of non-Teflon plastic tubing, non-Teflon thread sealants, or flow controllers with rubber components in the purge and trap system should be avoided.

3.2 Samples can be contaminated by diffusion of volatile organics through the septum seal into the sample during shipment and storage. A field reagent blank prepared from reagent water and carried through the sampling and handling protocol can serve as a check on such contamination.

3.3 Contamination by carry-over can occur whenever high level and low level samples are sequentially analyzed. To reduce carry-over, the purging device and sample syringe must be rinsed with reagent water between sample analyses. Whenever an unusually concentrated sample is encountered, it should be followed by an analysis of reagent water to check for cross contamination. For samples containing large amounts of water-soluble materials, suspended solids, high boiling compounds or high aromatic levels, it may be necessary to wash the purging device with a detergent solution, rinse it with distilled water, and then dry it in an oven at 105 °C between analyses. The trap and other parts of the system are also subject to contamination; therefore, frequent bakeout and purging of the entire system may be required.

4. Safety

4.1 The toxicity or carcinogenicity of each reagent used in this method has not been precisely defined; however, each chemical compound should be treated as a potential health hazard. From this viewpoint, exposure to these chemicals must be reduced to the lowest possible level by whatever means available. The laboratory is responsible for maintaining a current awareness file of OSHA regulations regarding the safe handling of the chemicals specified in this method. A reference file of material data handling sheets should also be made available to all personnel involved in the chemical analysis. Additional references to laboratory safety are available and have been identified[4-6] for the information of the analyst.

4.2 The following parameters covered by this method have been tentatively classified as known or suspected, human or mammalian carcinogens: benzene and 1,4-dichlorobenzene. Primary standards of these toxic compounds should be prepared in a hood. A NIOSH/MESA approved toxic gas respirator should be worn when the analyst handles high concentrations of these toxic compounds.

5. Apparatus and Materials

5.1 Sampling equipment, for discrete sampling.

5.1.1 Vial—25-mL capacity or larger, equipped with a screw cap with a hole in the center (Pierce #12075 or equivalent). Detergent wash, rinse with tap and distilled water, and dry at 105 °C before use.

5.1.2 Septum—Teflon-faced silicone (Pierce #12722 or equivalent). Detergent wash, rinse with tap and distilled water, and dry at 105 °C for 1 h before use.

5.2 Purge and trap system—The purge and trap system consists of three separate pieces of equipment: A purging device, trap, and desorber. Several complete systems are now commercially available.

5.2.1 The purging device must be designed to accept 5-mL samples with a water column at least 3 cm deep. The gaseous head space between the water column and the trap must have a total volume of less than 15 mL. The purge gas must pass through the water column as finely divided bubbles with a diameter of less than 3 mm at the origin. The purge gas must be introduced no more than 5 mm from the base of the water column. The purging device illustrated in Figure 1 meets these design criteria.

5.2.2 The trap must be at least 25 cm long and have an inside diameter of at least 0.105 in.

5.2.2.1 The trap is packed with 1 cm of methyl silicone coated packing (Section 6.4.2) and 23 cm of 2,6-diphenylene oxide polymer (Section 6.4.1) as shown in Figure 2. This trap was used to develop the method performance statements in Section 12.

5.2.2.2 Alternatively, either of the two traps described in Method 601 may be used, although water vapor will preclude the measurement of low concentrations of benzene.

5.2.3 The desorber must be capable of rapidly heating the trap to 190 °C. The polymer section of the trap should not be heated higher than 180 °C and the remaining sections should not exceed 200 °C. The desorber illustrated in Figure 2 meets these design criteria.

5.2.4 The purge and trap system may be assembled as a separate unit or be coupled to a gas chromatograph as illustrated in Figures 3, 4, and 5.

5.3 Gas chromatograph—An analytical system complete with a temperature programmable gas chromatograph suitable for on-column injection and all required accessories including syringes, analytical columns, gases, detector, and strip-chart recorder. A data system is recommended for measuring peak areas.

5.3.1 Column 1—6 ft long x 0.082 in. ID stainless steel or glass, packed with 5% SP-1200 and 1.75% Bentone-34 on Supelcoport (100/120 mesh) or equivalent. This column was used to develop the method performance statements in Section 12. Guidelines for the use of alternate column packings are provided in Section 10.1.

5.3.2 Column 2—6 ft long x 0.1 in ID stainless steel or glass, packed with 5% 1,2,3-Tris(2-cyanoethoxy)propane on Chromosorb W-AW (60/80 mesh) or equivalent.

5.3.3 Detector—Photoionization detector (h-Nu Systems, Inc. Model PI-51-02 or equivalent). This type of detector has been proven effective in the analysis of wastewaters for the parameters listed in the scope (Section 1.1), and was used to develop

AR301271

the method performance statements in Section 12. Guidelines for the use of alternate detectors are provided in Section 10.1.

5.4 Syringes—5-mL glass hypodermic with Luerlok tip (two each), if applicable to the purging device.

5.5 Micro syringes—25-µL, 0.006 in. ID needle.

5.6 Syringe valve—2-way, with Luer ends (three each).

5.7 Bottle—15-mL, screw-cap, with Teflon cap liner.

5.8 Balance—Analytical, capable of accurately weighing 0.0001 g.

6. Reagents

6.1 Reagent water—Reagent water is defined as a water in which an interferent is not observed at the MDL of the parameters of interest.

6.1.1 Reagent water can be generated by passing tap water through a carbon filter bed containing about 1 lb of activated carbon (Filtrasorb-300, Calgon Corp., or equivalent).

6.1.2 A water purification system (Millipore Super-Q or equivalent) may be used to generate reagent water.

6.1.3 Reagent water may also be prepared by boiling water for 15 min. Subsequently, while maintaining the temperature at 90 °C, bubble a contaminant-free inert gas through the water for 1 h. While still hot, transfer the water to a narrow mouth screw-cap bottle and seal with a Teflon-lined septum and cap.

6.2 Sodium thiosulfate—(ACS) Granular.

6.3 Hydrochloric acid (1+1)—Add 50 mL of concentrated HCl (ACS) to 50 mL of reagent water.

6.4 Trap Materials:

6.4.1 2,6-Diphenylene oxide polymer—Tenax, (60/80 mesh), chromatographic grade or equivalent.

6.4.2 Methyl silicone packing—3% OV-1 on Chromosorb-W (60/80 mesh) or equivalent.

6.5 Methanol—Pesticide quality or equivalent.

6.6 Stock standard solutions—Stock standard solutions may be prepared from pure standard materials or purchased as certified solutions. Prepare stock standard solutions in methanol using assayed liquids. Because of the toxicity of benzene and 1,4-dichlorobenzene, primary dilutions of these materials should be prepared in a hood. A NIOSH/MESA approved toxic gas respirator should be used when the analyst handles high concentrations of such materials.

6.6.1 Place about 9.8 mL of methanol into a 10-mL ground glass stoppered volumetric flask. Allow the flask to stand, unstoppered, for about 10 min or until all alcohol wetted surfaces have dried. Weigh the flask to the nearest 0.1 mg.

6.6.2 Using a 100-µL syringe, immediately add two or more drops of assayed reference material to the flask, then reweigh. Be sure that the drops fall directly into the alcohol without contacting the neck of the flask.

6.6.3 Reweigh, dilute to volume, stopper, then mix by inverting the flask several times. Calculate the concentration in µg/µL from the net gain in weight. When compound purity is assayed to be 96% or greater, the weight can be used without correction to calculate the concentration of the stock standard. Commercially prepared stock standards can be used at any concentration if they are certified by the manufacturer or by an independent source.

6.6.4 Transfer the stock standard solution into a Teflon-sealed screw-cap bottle. Store at 4 °C and protect from light.

6.6.5 All standards must be replaced after one month, or sooner if comparison with check standards indicates a problem.

6.7 Secondary dilution standards—Using stock standard solutions, prepare secondary dilution standards in methanol that contain the compounds of interest, either singly or mixed together. The secondary dilution standards should be prepared at concentrations such that the aqueous calibration standards prepared in Sections 7.3.1 or 7.4.1 will bracket the working range of the analytical system. Secondary solution standards must be stored with zero headspace and should be checked frequently for signs of degradation or evaporation, especially just prior to preparing calibration standards from them.

6.8 Quality control check sample concentrate—See Section 8.2.1.

7. Calibration

7.1 Assemble a purge and trap system that meets the specifications in Section 5.2. Condition the trap overnight at 180 °C by backflushing with an inert gas flow of at least 20 mL/min. Condition the trap for 10 min once daily prior to use.

7.2 Connect the purge and trap system to a gas chromatograph. The gas chromatograph must be operated using temperature and flow rate conditions equivalent to those given in Table 1. Calibrate the purge and trap-gas chromatographic system using either the external standard technique (Section 7.3) or the internal standard technique (Section 7.4).

7.3 External standard calibration procedure:

7.3.1 Prepare calibration standards at a minimum of three concentration levels for each parameter by carefully adding 20.0 µL of one or more secondary dilution standards to 100, 500, or 1000 mL of reagent water. A 25-µL syringe with a 0.006 in. ID needle should be used for this operation. One of the external standards should be at a concentration near, but above, the MDL (Table 1) and the other concentrations should correspond to the expected range of concentrations found in real samples or should define the working range of the detector. These aqueous standards must be prepared fresh daily.

7.3.2 Analyze each calibration standard according to Section 10, and tabulate peak height or area responses versus the concentration in the standard. The results can be used to prepare a calibration curve for each compound. Alternatively, if the ratio of response to concentration (calibration factor) is a constant over the working range (<10% relative standard deviation, RSD), linearity through the origin can be assumed and the average ratio or calibration factor can be used in place of a calibration curve.

7.4 Internal standard calibration procedure—To use this approach, the analyst must select one or more internal standards that are similar in analytical behavior to the compounds of interest. The analyst must further demonstrate that the measurement of the internal standard is not affected by method or matrix interferences. Because of these limitations, no internal standard can be suggested that is applicable to all samples. The compound, a,a,a,-trifluorotoluene, recommended as a surrogate spiking compound in Section 8.7 has been used successfully as an internal standard.

7.4.1 Prepare calibration standards at a minimum of three concentration levels for each parameter of interest as described in Section 7.3.1.

7.4.2 Prepare a spiking solution containing each of the internal standards using the procedures described in Section 6.6 and 6.7. It is recommended that the secondary dilution standard be prepared at a concentration of 15 µg/mL of each internal standard compound. The addition of 10 µl of this standard to 5.0 mL of sample or calibration standard would be equivalent to 30 µg/L.

7.4.3 Analyze each calibration standard according to Section 10, adding 10 µL of internal standard spiking solution directly to the syringe (Section 10.4). Tabulate peak height or area responses against concentration for each compound and internal standard, and calculate response factors (RF) for each compound using Equation 1.

Equation 1.

$$RF = \frac{(A_s)(C_{is})}{(A_{is})(C_s)}$$

where:

A_s = Response for the parameter to be measured.

A_{is} = Response for the internal standard.

C_{is} = Concentration of the internal standard

C_s = Concentration of the parameter to be measured.

If the RF value over the working range is a constant (<10% RSD), the RF can be assumed to be invariant and the average RF can be used for calculations. Alternatively, the results can be used to plot a calibration curve of response ratios, A_s/A_{is} vs. RF.

7.5 The working calibration curve, calibration factor, or RF must be verified on each working day by the measurement of a QC check sample.

7.5.1 Prepare the QC check sample as described in Section 8.2.2.

7.5.2 Analyze the QC check sample according to Section 10.

7.5.3 For each parameter, compare the response (Q) with the corresponding calibration acceptance criteria found in Table 2. If the responses for all parameters of interest fall within the designated ranges, analysis of actual samples can begin. If any individual Q falls outside the range, a new calibration curve, calibration factor, or RF must be prepared for that parameter according to Section 7.3 or 7.4.

8. Quality Control

8.1 Each laboratory that uses this method is required to operate a formal quality control program. The minimum requirements of this program consist of an initial demonstration of

AR301272

laboratory capability and an ongoing analysis of spiked samples to evaluate and document data quality. The laboratory must maintain records to document the quality of data that is generated. Ongoing data quality checks are compared with established performance criteria to determine if the results of analyses meet the performance characteristics of the method. When results of sample spikes indicate atypical method performance, a quality control check standard must be analyzed to confirm that the measurements were performed in an in-control mode of operation.

8.1.1 The analyst must make an initial, one-time, demonstration of the ability to generate acceptable accuracy and precision with this method. This ability is established as described in Section 8.2.

8.1.2 In recognition of advances that are occurring in chromatography, the analyst is permitted certain options (detailed in Section 10.1) to improve the separations or lower the cost of measurements. Each time such a modification is made to the method, the analyst is required to repeat the procedure in Section 8.2.

8.1.3 Each day, the analyst must analyze a reagent water blank to demonstrate that interferences from the analytical system are under control.

8.1.4 The laboratory must, on an ongoing basis, spike and analyze a minimum of 10% of all samples to monitor and evaluate laboratory data quality. This procedure is described in Section 8.3.

8.1.5 The laboratory must, on an ongoing basis, demonstrate through the analyses of quality control check standards that the operation of the measurement system is in control. This procedure is described in Section 8.4. The frequency of the check standard analyses is equivalent to 10% of all samples analyzed but may be reduced if spike recoveries from samples (Section 8.3) meet all specified quality control criteria.

8.1.6 The laboratory must maintain performance records to document the quality of data that is generated. This procedure is described in Section 8.5.

8.2 To establish the ability to generate acceptable accuracy and precision, the analyst must perform the following operations.

8.2.1 A quality control (QC) check sample concentrate is required containing each parameter of interest at a concentration of 10 µg/mL in methanol. The QC check sample concentrate must be obtained from the U.S. Environmental Protection Agency, Environmental Monitoring and Support Laboratory in Cincinnati, Ohio, if available. If not available from that source, the QC check sample concentrate must be obtained from another external source. If not available from either source above, the QC check sample concentrate must be prepared by the laboratory using stock standards prepared independently from those used for calibration.

8.2.2 Prepare a QC check sample to contain 20 µg/L of each parameter by adding 200 µL of QC check sample concentrate to 100 mL of reagent water.

8.2.3 Analyze four 5-mL aliquots of the well-mixed QC check sample according to Section 10.

8.2.4 Calculate the average recovery ($\bar{X}$) in µg/L, and the standard deviation of the recovery (s) in µg/L, for each parameter of interest using the four results.

8.2.5 For each parameter compare s and $\bar{X}$ with the corresponding acceptance criteria for precision and accuracy, respectively, found in Table 2. If s and $\bar{X}$ for all parameters of interest meet the acceptance criteria, the system performance is acceptable and analysis of actual samples can begin. If any individual s exceeds the precision limit or any individual $\bar{X}$ falls outside the range for accuracy, the system performance is unacceptable for that parameter.

Note.—The large number of parameters in Table 2 present a substantial probability that one or more will fail at least one of the acceptance criteria when all parameters are analyzed.

8.2.6 When one or more of the parameters tested fail at least one of the acceptance criteria, the analyst must proceed according to Section 8.2.6.1 or 8.2.6.2.

8.2.6.1 Locate and correct the source of the problem and repeat the test for all parameters of interest beginning with Section 8.2.3.

8.2.6.2 Beginning with Section 8.2.3, repeat the test only for those parameters that failed to meet criteria. Repeated failure, however, will confirm a general problem with the measurement system. If this occurs, locate and correct the source of the problem and repeat the test for all compounds of interest beginning with Section 8.2.3.

8.3 The laboratory must, on an ongoing basis, spike at least 10% of the samples from each sample site being monitored to assess accuracy. For laboratories analyzing one to ten samples per month, at least one spiked sample per month is required.

8.3.1 The concentration of the spike in the sample should be determined as follows:

8.3.1.1 If, as in compliance monitoring, the concentration of a specific parameter in the sample is being checked against a regulatory concentration limit, the spike should be at that limit or 1 to 5 times higher than the background concentration determined in Section 8.3.2, whichever concentration would be larger.

8.3.1.2 If the concentration of a specific parameter in the sample is not being checked against a limit specific to that parameter, the spike should be at 20 µg/L or 1 to 5 times higher than the background concentration determined in Section 8.3.2, whichever concentration would be larger.

8.3.2 Analyze one 5-mL sample aliquot to determine the background concentration (B) of each parameter. If necessary, prepare a new QC check sample concentrate (Section 8.2.1) appropriate for the background concentrations in the sample. Spike a second 5-mL sample aliquot with 10 µL of the QC check sample concentrate and analyze it to determine the concentration after spiking (A) of each parameter. Calculate each percent recovery (P) as 100(A–B)%/T, where T is the known true value of the spike.

8.3.3 Compare the percent recovery (P) for each parameter with the corresponding QC acceptance criteria found in Table 2. These acceptance criteria were calculated to include an allowance for error in measurement of both the background and spike concentrations, assuming a spike to background ratio of 5:1. This error will be accounted for to the extent that the analyst's spike to background ratio approaches 5:1.[7] If spiking was performed at a concentration lower than 20 µg/L, the analyst must use either the QC acceptance criteria in Table 2, or optional QC acceptance criteria calculated for the specific spike concentration. To calculate optional acceptance criteria for the recovery of a parameter: (1) Calculate accuracy (X') using the equation in Table 3, substituting the spike concentration (T) for C; (2) calculate overall precision (S') using the equation in Table 3, substituting X' for $\bar{X}$; (3) calculate the range for recovery at the spike concentration as (100 X'/T) ± 2.44(100 S'/T)%.[7]

8.3.4 If any individual P falls outside the designated range for recovery, that parameter has failed the acceptance criteria. A check standard containing each parameter that failed the criteria must be analyzed as described in Section 8.4.

8.4 If any parameter fails the acceptance criteria for recovery in Section 8.3, a QC check standard containing each parameter that failed must be prepared and analyzed.

Note: The frequency for the required analysis of a QC check standard will depend upon the number of parameters being simultaneously tested, the complexity of the sample matrix, and the performance of the laboratory.

8.4.1 Prepare the QC check standard by adding 10 µL of QC check sample concentrate (Sections 8.2.1 or 8.3.2) to 5 mL of reagent water. The QC check standard needs only to contain the parameters that failed criteria in the test in Section 8.3.

8.4.2 Analyze the QC check standard to determine the concentration measured (A) of each parameter. Calculate each percent recovery (P_s) as 100 (A/T)%, where T is the true value of the standard concentration.

8.4.3 Compare the percent recovery (P_s) for each parameter with the corresponding QC acceptance criteria found in Table 2. Only parameters that failed the test in Section 8.3 need to be compared with these criteria. If the recovery of any such parameter falls outside the designated range, the laboratory performance for that parameter is judged to be out of control, and the problem must be immediately identified and corrected. The analytical result for that parameter in the unspiked sample is suspect and may not be reported for regulatory compliance purposes.

8.5 As part of the QC program for the laboratory, method accuracy for wastewater samples must be assessed and records must be maintained. After the analysis of five spiked wastewater samples as in Section 8.3, calculate the average percent recovery ($\bar{P}$) and the standard deviation of the percent recovery (s_p). Express the accuracy assessment as a percent recovery interval from $\bar{P} - 2s_p$ to $\bar{P} + 2s_p$. If $\bar{P}$ = 90% and s_p = 10%, for example, the accuracy interval is expressed as 70–110%. Update the accuracy assessment for each parameter on a regular basis (e.g. after each five to ten new accuracy measurements).

AR 301273

8.6 It is recommended that the laboratory adopt additional quality assurance practices for use with this method. The specific practices that are most productive depend upon the needs of the laboratory and the nature of the samples. Field duplicates may be analyzed to assess the precision of the environmental measurements. When doubt exists over the identification of a peak on the chromatogram, confirmatory techniques such as gas chromatography with a dissimilar column, specific element detector, or mass spectrometer must be used. Whenever possible, the laboratory should analyze standard reference materials and participate in relevant performance evaluation studies.

8.7 The analyst should monitor both the performance of the analytical system and the effectiveness of the method in dealing with each sample matrix by spiking each sample, standard, and reagent water blank with surrogate compounds (e.g. α, α, α,-trifluorotoluene) recommended to encompass the range of the temperature program used in this method. From stock standard solutions prepared as in Section 6.6, add a volume to give 750 μg of each surrogate to 45 mL of reagent water contained in a 50-mL volumetric flask, mix and dilute to volume for a concentration of 15 mg/μL. Add 10 μL of this surrogate spiking solution directly into the 5-mL syringe with every sample and reference standard analyzed. Prepare a fresh surrogate spiking solution on a weekly basis. If the internal standard calibration procedure is being used, the surrogate compounds may be added directly to the internal standard spiking solution (Section 7.4.2).

9. Sample Collection, Preservation, and Handling

9.1 The samples must be iced or refrigerated from the time of collection until analysis. If the sample contains free or combined chlorine, add sodium thiosulfate preservative (10 mg/40 mL is sufficient for up to 5 ppm Cl_2) to the empty sample bottle just prior to shipping to the sampling site. EPA Method 330.4 or 330.5 may be used for measurement of residual chlorine.[8] Field test kits are available for this purpose.

9.2 Collect about 500 mL of sample in a clean container. Adjust the pH of the sample to about 2 by adding 1+1 HCl while stirring. Fill the sample bottle in such a manner that no air bubbles pass through the sample as the bottle is being filled. Seal the bottle so that no air bubbles are entrapped in it. Maintain the hermetic seal on the sample bottle until time of analysis.

9.3 All samples must be analyzed within 14 days of collection.[3]

10. Procedure

10.1 Table 1 summarizes the recommended operating conditions for the gas chromatograph. Included in this table are estimated retention times and MDL that can be achieved under these conditions. An example of the separations achieved by Column 1 is shown in Figure 6. Other packed columns, chromatographic conditions, or detectors may be used if the requirements of Section 8.2 are met.

10.2 Calibrate the system daily as described in Section 7.

10.3 Adjust the purge gas (nitrogen or helium) flow rate to 40 mL/min. Attach the trap inlet to the purging device, and set the purge and trap system to purge (Figure 3). Open the syringe valve located on the purging device sample introduction needle.

10.4 Allow the sample to come to ambient temperature prior to introducing it to the syringe. Remove the plunger from a 5-mL syringe and attach a closed syringe valve. Open the sample bottle (or standard) and carefully pour the sample into the syringe barrel to just short of overflowing. Replace the syringe plunger and compress the sample. Open the syringe valve and vent any residual air while adjusting the sample volume to 5.0 mL. Since this process of taking an aliquot destroys the validity of the sample for future analysis, the analyst should fill a second syringe at this time to protect against possible loss of data. Add 10.0 μL of the surrogate spiking solution (Section 8.7) and 10.0 μL of the internal standard spiking solution (Section 7.4.2), if applicable, through the valve bore, then close the valve.

10.5 Attach the syringe-syringe valve assembly to the syringe valve on the purging device. Open the syringe valves and inject the sample into the purging chamber.

10.6 Close both valves and purge the sample for 12.0±0.1 min at ambient temperature.

10.7 After the 12-min purge time, disconnect the purging device from the trap. Dry the trap by maintaining a flow of 40 mL/min of dry purge gas through it for 6 min (Figure 4). If the purging device has no provision for bypassing the purger for this step, a dry purger should be inserted into the device to minimize moisture in the gas. Attach the trap to the chromatograph, adjust the purge and trap system to the desorb mode (Figure 5), and begin to temperature program the gas chromatograph. Introduce the trapped materials to the GC column by rapidly heating the trap to 180 °C while backflushing the trap with an inert gas between 20 and 60 mL/min for 4 min. If rapid heating of the trap cannot be achieved, the GC column must be used as a secondary trap by cooling it to 30 °C (subambient temperature, if poor peak geometry and random retention time problems persist) instead of the initial program temperature of 50 °C.

10.8 While the trap is being desorbed into the gas chromatograph column, empty the purging chamber using the sample introduction syringe. Wash the chamber with two 5-mL flushes of reagent water.

10.9 After desorbing the sample for 4 min, recondition the trap by returning the purge and trap system to the purge mode. Wait 15 s, then close the syringe valve on the purging device to begin gas flow through the trap. The trap temperature should be maintained at 180 °C. After approximately 7 min, turn off the trap heater and open the syringe valve to stop the gas flow through the trap. When the trap is cool, the next sample can be analyzed.

10.10 Identify the parameters in the sample by comparing the retention times of the peaks in the sample chromatogram with those of the peaks in standard chromatograms. The width of the retention time window used to make identifications should be based upon measurements of actual retention time variations of standards over the course of a day. Three times the standard deviation of a retention time for a compound can be used to calculate a suggested window size; however, the experience of the analyst should weigh heavily in the interpretation of chromatograms.

10.11 If the response for a peak exceeds the working range of the system, prepare a dilution of the sample with reagent water from the aliquot in the second syringe and reanalyze.

11. Calculations

11.1 Determine the concentration of individual compounds in the sample.

11.1.1 If the external standard calibration procedure is used, calculate the concentration of the parameter being measured from the peak response using the calibration curve or calibration factor determined in Section 7.3.2.

11.1.2 If the internal standard calibration procedure is used, calculate the concentration in the sample using the response factor (RF) determined in Section 7.4.3 and Equation 2.

Equation 2.

$$\text{Concentration } (\mu g/L) = \frac{(A_s)(C_{is})}{(A_{is})(RF)}$$

where:

A_s = Response for the parameter to be measured.

A_{is} = Response for the internal standard.

C_{is} = Concentration of the internal standard.

11.2 Report results in μg/L without correction for recovery data. All QC data obtained should be reported with the sample results.

12. Method Performance

12.1 The method detection limit (MDL) is defined as the minimum concentration of a substance that can be measured and reported with 99% confidence that the value is above zero.[1] The MDL concentrations listed in Table 1 were obtained using reagent water.[9] Similar results were achieved using representative wastewaters. The MDL actually achieved in a given analysis will vary depending on instrument sensitivity and matrix effects.

12.2 This method has been demonstrated to be applicable for the concentration range from the MDL to 1000 X MDL.[9] Direct aqueous injection techniques should be used to measure concentration levels above 1000 x MDL.

12.3 This method was tested by 20 laboratories using reagent water, drinking water, surface water, and three industrial wastewaters spiked at concentrations over the range 2.1 to 560 μg/L.[9] Single operator precision, overall precision, and method accuracy were found to be directly related to the concentration of the parameter and essentially independent of the sample

AR301274

matrix. Linear equations to describe these relationships are presented in Table 3.

References

1. 40 CFR Part 136, Appendix B.
2. Bellar, T.A., and Lichtenberg, J.J. *Journal American Water Works Association*, 66, 739 (1974).
3. Bellar, T.A., and Lichtenberg, J.J. "Semi-Automated Headspace Analysis of Drinking Waters and Industrial Waters for Purgeable Volatile Organic Compounds." Proceedings of Symposium on Measurement of Organic Pollutants in Water and Wastewater. American Society for Testing and Materials, STP 686, C.E. Van Hall, editor, 1978.
4. "Carcinogens—Working with Carcinogens." Department of Health, Education, and Welfare, Public Health Service, Center for Disease Control, National Institute for Occupational Safety and Health, Publication No. 77-206, August 1977.
5. "OSHA Safety and Health Standards, General Industry," (29 CFR 1910), Occupational Safety and Health Administration, OSHA 2206 (Revised, January 1976).
6. "Safety in Academic Chemistry Laboratories," American Chemical Society Publication, Committee on Safety, 3rd Edition, 1979.
7. Provost, L.P., and Elder, R.S. "Interpretation of Percent Recovery Data," *American Laboratory*, 15, 58-63 (1983). (The value 2.44 used in the equation in Section 8.3.3. is two times the value 1.22 derived in this report.)
8. "Methods 330.4 (Titrimetric, DPD-FAS) and 330.5 (Spectrophotometric, DPD) for Chlorine, Total Residual." Methods for Chemical Analysis of Water and Wastes, EPA-600/4-79-020, U.S. Environmental Protection Agency, Office of Research and Development, Environmental Monitoring and Support Laboratory, Cincinnati, Ohio 45268, March 1979.
9. "EPA Method Validation Study 24, Method 602 (Purgeable Aromatics)." Report for EPA Contract 68-03-2856 (In preparation).

TABLE 1.—CHROMATOGRAPHIC CONDITIONS AND METHOD DETECTION LIMITS

Parameter	Retention time (min)		Method detection limit (µg/L)
	Column 1	Column 2	
Benzene	3.33	2.75	0.2
Toluene	5.75	4.25	0.2
Ethylbenzene	8.25	6.25	0.2
Chlorobenzene	8.17	6.02	0.2
1,4-Dichlorobenzene	18.8	16.2	0.3
1,3-Dichlorobenzene	18.2	15.0	0.4
1,2-Dichlorobenzene	25.8	18.4	0.4

Column 1 conditions: Supelcoport (100/120 mesh) coated with 5% SP-1200/1.75% Bentone-34 packed in a 6 ft x 0.085 in. ID stainless steel column with helium carrier gas at 30 mL/min flow rate. Column temperature held at 50 °C for 2 min then programmed at 6 °C/min to 90 °C for a final hold.

Column 2 conditions: Chromosorb W-AW (80/90 mesh) coated with 5% 1,2,3-Tris(2-cyanoethyoxy)propane packed in a 6 ft x 0.085 in. ID stainless steel column with helium carrier gas at 30 mL/min flow rate. Column temperature held at 40 °C for 2 min then programmed at 2 °C/min to 100 °C for a final hold.

TABLE 2.—CALIBRATION AND QC ACCEPTANCE CRITERIA—METHOD 602 *

Parameter	Range for Q (µg/L)	Limit for s (µg/L)	Range for $\bar{X}$ (µg/L)	Range for P_s, P_o (%)
Benzene	15.4-24.6	4.1	10.0-27.9	39-150
Chlorobenzene	16.1-23.9	3.8	12.7-23.4	55-136
1,2-Dichlorobenzene	13.6-26.4	6.8	10.8-27.8	37-154
1,3-Dichlorobenzene	14.5-25.5	6.0	12.8-25.8	50-141
1,4-Dichlorobenzene	13.9-26.1	6.6	11.8-25.8	42-143
Ethylbenzene	12.6-27.4	6.7	10.0-28.2	32-160
Toluene	16.5-24.5	4.0	11.2-27.7	46-148

Q = Concentration measured in QC check sample, in µg/L (Section 7.6.3).
s = Standard deviation of four recovery measurements, in µg/L (Section 8.2.4).
$\bar{X}$ = Average recovery for four recovery measurements, in µg/L (Section 8.2.4).
P_s, P_o = Percent recovery measured (Section 8.3.2, Section 8.4.2).
* Criteria were calculated assuming a QC check sample concentration of 20 µg/L.

Note: These criteria are based directly upon the method performance data in Table 3. Where necessary, the limits for recovery have been broadened to assure applicability of the limits to concentrations below those used to develop Table 3.

TABLE 3.—METHOD ACCURACY AND PRECISION AS FUNCTIONS OF CONCENTRATION—METHOD 602

Parameter	Accuracy, as recovery, $\bar{X}'$ (µg/L)	Single analyst precision, s_r' (µg/L)	Overall precision, S' (µg/L)
Benzene	0.82C+0.87	$0.08\bar{X}+0.58$	$0.21\bar{X}+0.54$
Chlorobenzene	0.86C+0.02	$0.08\bar{X}+0.23$	$0.17\bar{X}+0.10$
1,2-Dichlorobenzene	0.93C+0.52	$0.17\bar{X}-0.04$	$0.22\bar{X}+0.63$
1,3-Dichlorobenzene	0.96C−0.04	$0.15\bar{X}-0.10$	$0.19\bar{X}+0.08$
1,4-Dichlorobenzene	0.93C+0.08	$0.15\bar{X}+0.28$	$0.20\bar{X}+0.41$
Ethylbenzene	0.84C+0.31	$0.17\bar{X}+0.46$	$0.28\bar{X}+0.23$
Toluene	0.84C+0.65	$0.08\bar{X}+0.48$	$0.18\bar{X}+0.71$

$\bar{X}'$ = Expected recovery for one or more measurements of a sample containing a concentration of C, in µg/L.
s_r' = Expected single analyst standard deviation of measurements at an average concentration found of $\bar{X}$, in µg/L.
S' = Expected interlaboratory standard deviation of measurements at an average concentration found of $\bar{X}$, in µg/L.
C = True value for the Concentration, in µg/L.
$\bar{X}$ = Average recovery found for measurements of samples containing a concentration of C, in µg/L.

BILLING CODE 6560-50-M

AR301275

A

METHOD DETECTION LIMITS

602

Table 1. Chromatographic Conditions and Method Detection Limits

Parameter	Retention Time (min.) Column 1	Retention Time (min.) Column 2	Method Detection Limit µg/L
Benzene	3.33	2.75	0.2
Toluene	5.75	4.25	0.2
Ethylbenzene	8.25	6.25	0.2
Chlorobenzene	9.17	8.02	0.2
1,4-Dichlorobenzene	16.8	16.2	0.3
1,3-Dichlorobenzene	18.2	15.0	0.4
1,2-Dichlorobenzene	25.9	19.4	0.4

Column 1 conditions: Supelcoport 100/120 mesh coated with 5% SP-1200 and 1.75% Bentone-34 packed in a 6 ft. x 0.085 in ID stainless steel column with helium carrier gas at 36 cc/min flow rate. Column temperature held at 50°C for 2 min. then programmed at 6°C/min to 90°C for a final hold.

Column 2 conditions: Chromosorb W-AW 60/80 mesh coated with 5% 1,2,3-Tris(2-cyanoethyoxy)propane packed in a 6 ft. x 0.085 in ID stainless steel column with helium carrier gas at 30 cc/min flow rate. Column temperature held at 40°C for 2 min then programmed at 2°C/min to 100°C for a final hold.

B

PRECISION DESIRED

602

TABLE 3.—METHOD ACCURACY AND PRECISION AS FUNCTIONS OF CONCENTRATION—METHOD 602

Parameter	Accuracy, as recovery, X' (µg/L)	Single analyst precision, s' (µg/L)	Overall precision, S' (µg/L)
Benzene	0.92C+0.57	0.08X̄+0.59	0.21X̄+0.58
Chlorobenzene	0.95C+0.02	0.09X̄+0.23	0.17X̄+0.10
1,2-Dichlorobenzene	0.93C+0.52	0.17X̄−0.04	0.22X̄+0.63
1,3-Dichlorobenzene	0.96C−0.04	0.15X̄−0.10	0.19X̄+0.08
1,4-Dichlorobenzene	0.93C+0.09	0.15X̄+0.28	0.20X̄+0.41
Ethylbenzene	0.94C+0.31	0.17X̄+0.46	0.26X̄+0.23
Toluene	0.94C+0.65	0.08X̄+0.49	0.18X̄+0.71

X'=Expected recovery for one or more measurements of a sample containing a concentration of C, in µg/L.
s'=Expected single analyst standard deviation of measurements at an average concentration found of X̄, in µg/L.
S'=Expected interlaboratory standard deviation of measurements at an average concentration found of X̄, in µg/L.
C=True value for the Concentration, in µg/l..
X̄=Average recovery found for measurements of samples containing a concentration of C, in µg/L.

AR301277

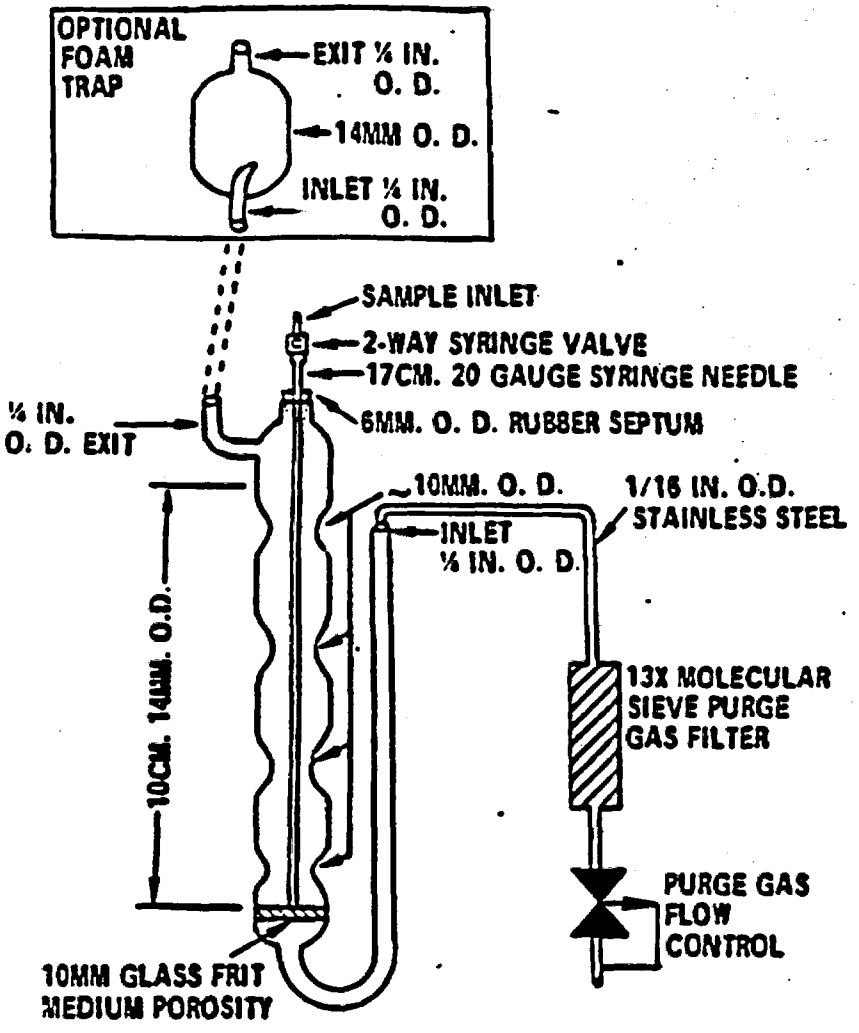

Figure 1. Purging device.

AR301278

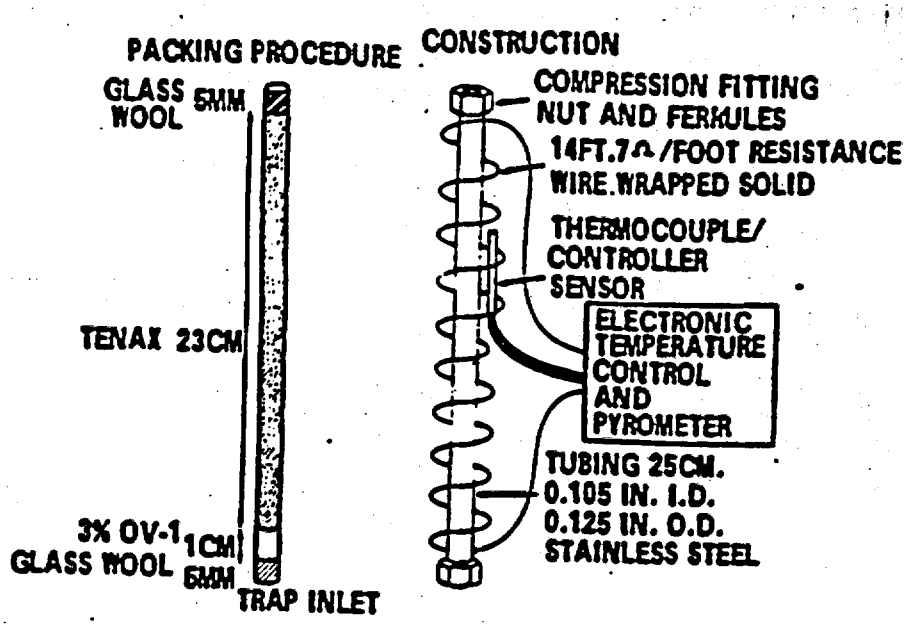

Figure 2. Trap packings and construction to include desorb capability.

AR301279

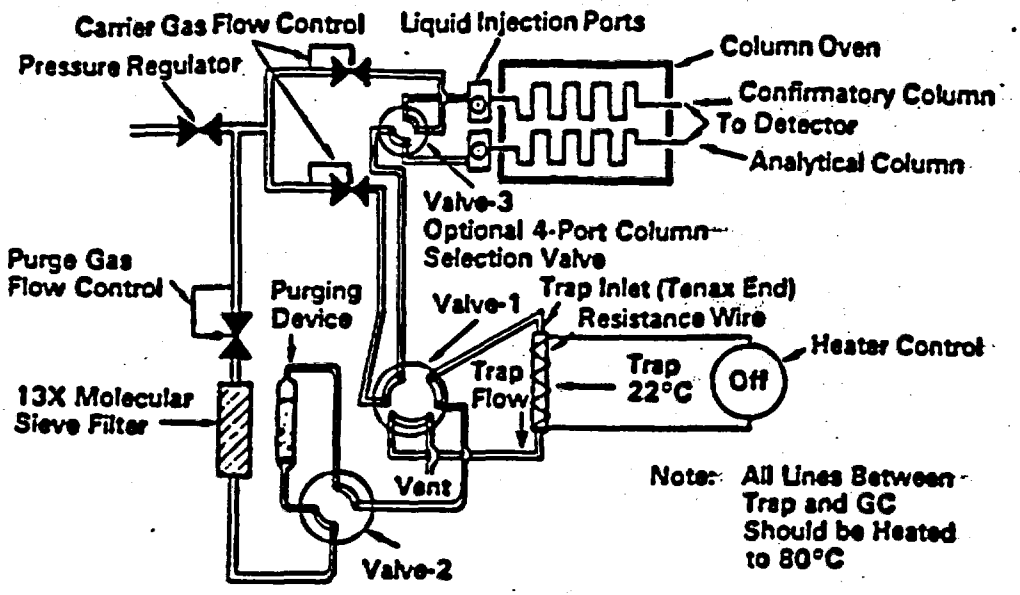

Figure 3. Purge and trap system - purge mode.

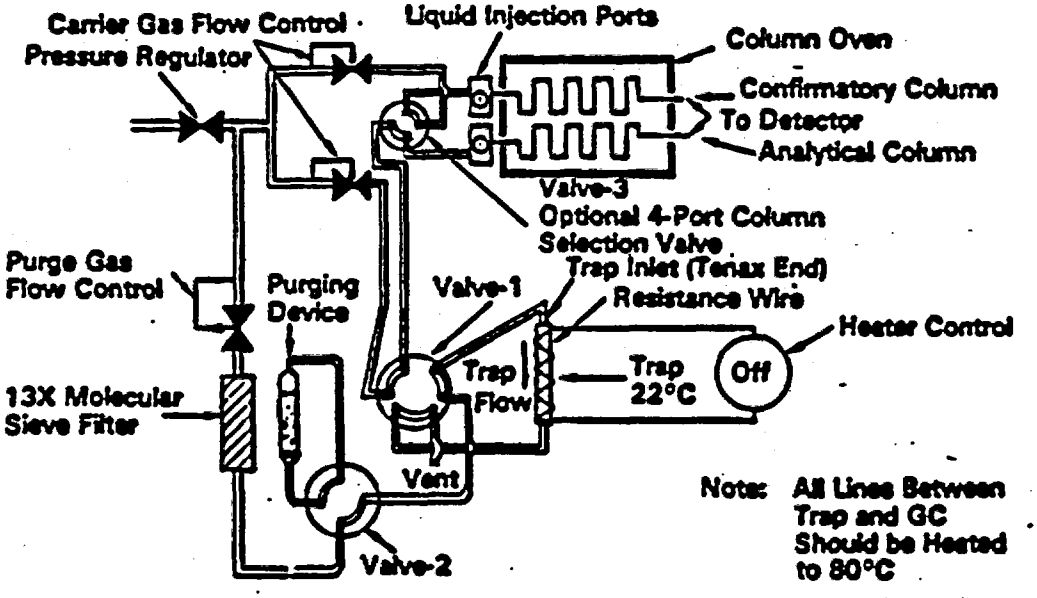

Figure 4. Purge and trap system-dry mode.

AR301280

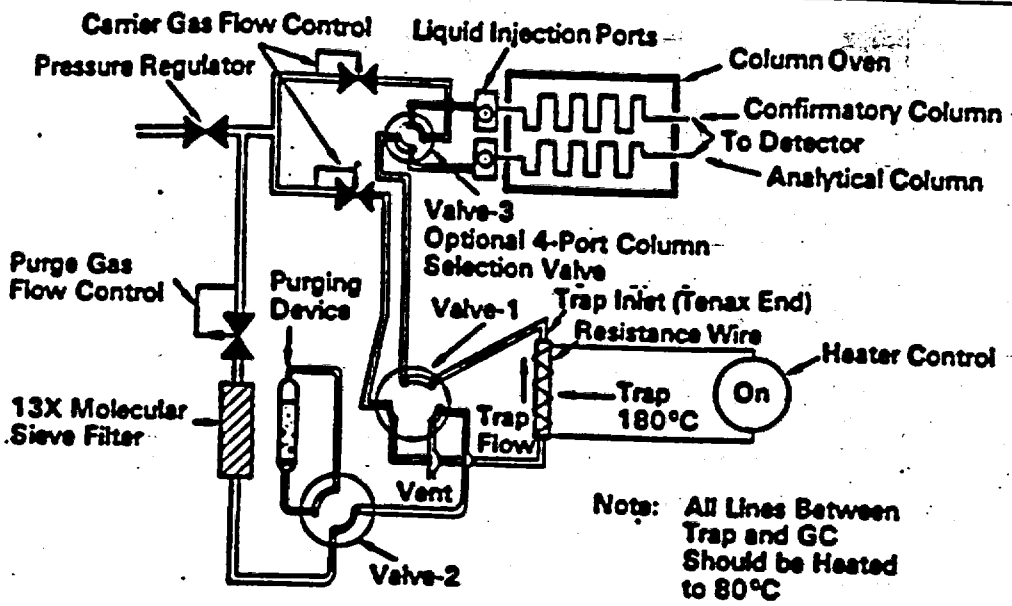

Figure 5. Purge and trap system-desorb mode.

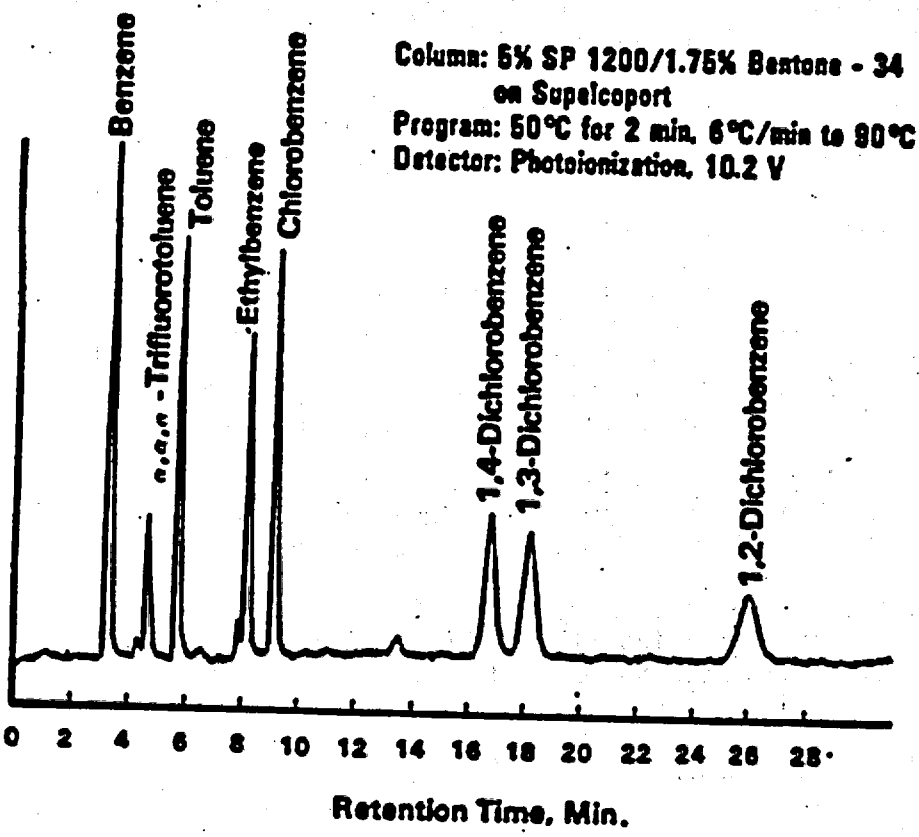

Figure 6. Gas chromatogram of purgeable aromatics.

BILLING CODE 6560-50-C

AR301281

CROYDON #6

U.S ENVIRONMENTAL PROTECTION AGENCY
CLP SAMPLE MANAGEMENT OFFICE
P.O. BOX 818 - ALEXANDRIA, VIRGINIA 22313
PHONE: 703/557-2490 - FTS/557-2490

SAS Number-

SPECIAL ANALYTICAL SERVICES
Client Request

Regional Transmittal

Telephone Request

A. EPA Region/Client: EPA-Region III - REM III

B. RSCC Representative: Colleen Walling

C. Telephone Number: (301) 266-9180

D. Date of Request: September 22, 1988

E. Site Name: Croydon TCE Site, Bucks County, Pennsylvania

Please provide below description of your request for Special Analytical Services under the Contract Laboratory Program. In order to most efficiently obtain laboratory capability for your request, please address the following considerations, if applicable. Incomplete or erroneous information may result in a delay in the processing of your request. Please continue response on additional sheets, or attach supplementary information as needed.

1. General Description of analytical service requested:

   Analysis of 7 surface water samples and 3 rinsate blanks for VOAs by EPA Methods 601 and 602. Second column confirmation of positives >1 ug/l is required. A purge and trap volatiles analysis of a 5 ml water sample analyzed on a gas chromatagraph equipped with a Hall Detector and Photoionization Detector (PID) is required.

2. Definition and number of work units involved (specify whether whole samples or fractions; whether organics or inorganics; whether aqueous or soil and sediments; and whether low, medium, or high concentration):

   7 low concentration surface water samples; 1 field duplicate; 1 lab duplicate; and 3 low concentration rinsate blanks for a total of 12 work units for VOAs by EPA Methods 601 and 602. Second column confirmation is required.

3. Purpose of analysis (specify whether Superfund (enforcement or remedial action), RCRA, NPDES, etc.):

   Superfund - RI/FS - REM III
   Account No:

AR301282

SAS Approved By (signature):
Date:

4. **Estimated date(s) of collection:**

November 14 - 18, 1988

5. **Estimated date(s) and method of shipment:**

November 14 - 18, 1988

Samples will be shipped daily by overnight air carrier. These dates are tentative and are dependent on the project remaining on schedule. Sampling may continue into the week of November 21.

6. **Number of days analysis and data required after laboratory receipt of samples:**

40 days from receipt of the last sample.

7. **Analytical protocol required (attach copy if other than protocol currently used in this program):**

EPA Methods 601/602 from "Methods for Organic Chemical Analysis of Municipal and Industrial Wastewater". EPA-600/4-82-057, July 1982. Second column confirmation is required. Method is attached. See Appendix A; Attachments #1 and #2 for specific requirements.

8. **Special technical instructions (if outside protocol requirements, specify compound names, CAS numbers, detection limits, etc.):**

Second column confirmation is required. See Appendix A; Attachments #1 and #2 for specific requirements.

9. **Analytical results required (if known, specify format for data sheets, QA/QC reports, Chain-of-Custody documentation, etc.) If not completed, format of results will be left to program discretion.**

Package format similar to CLP as per Exhibit B, Section II of the USEPA Contract Laboratory Program, Statement of Work for Organic Analysis, July 1987 Revision. See Appendix A; Attachments #1 and #2 and Note #4 for specific requirements.

10. **Other (use additional sheets or attach supplementary information, as needed):**

11. **Name of sampling/shipping contact:**

Raymond Wattras - NUS Corp.
(412) 788-1080

AR301283

12. Data Requirements

Parameter	Detection Limit	Precicion Desired (+% or Concentration)

Target Compounds - See Note #1, Appendix A, Attachment #1

Detection Limits - See Note #1, Appendix A

13. QC Requirements

Audits Required	Frequency of Audits	Limits (Percent or Concentration)
Quality Control Check Sample	4 Initially and then 1/10 samples	per Section 8.2.5 of attached method
Blanks	1/day of analysis	Below method detection limit.
Matrix Spike	1/10	per Section 8.3 of attached method
Matrix Spike Duplicate	1/10	per Section 8.3 of attached method

Initial and Continuing Calibration - See Notes #2 and #3, Appendix A and Attachment #2.

14. Action Required if Limits are Exceeded

As specified in the Attached Appendices and Attachments.

15. Request Prepared By:

Gregory L. Zimmerman - NUS Corporation - (412) 788-1080
September 22, 1988

16. Request Reviewed By (CRL use only):
Date:

Please return this request to the Sample Management Office as soon as possible to expedite processing of your request for Special Analytical Services. Should you have any questions or need any assistance, please contact your Regional representative at the Sample Management Office.

AR301284

AR301284

APPENDIX A

NOTE 1.

Target compounds are halogenated volatile compounds from the CLP TCL plus benzene, toluene, ethyl benzene, xylene isomers, dichlorobenzene isomers and chlorobenzene. The required detection limits are 1 (ug/L). Sample results indicating levels > 1 (ug/L), must be confirmed using a second column analysis.

NOTE 2.

EPA Methods 601 and 602 from 40 CFR Part 136 of 10/26/84 with:

A. Initial 3 point calibration(5, 20, 40 ppb).
B. One method blank every 12 hours .
C. Calibration check standard run at 20 ppb every 12 hours.
D. Second column confirmation for positives(values greater than 1(ug/L)); the second column must be a different column than the first.
E. Brief description by laboratory on specific procedure.

NOTE 3.

Calculate and compare response of initial calibration and check standards. If the % deviation in the response factor comparison is > than 25%, call DPO Chuck Sands or John Scalera at (301) 266-9180 prior to data submission. At the Sample Management Office (SMO), action determined by the degree of non-compliance may range from:

A. Only noting non-compliance in the report narrative.
B. Requiring a new initial calibration and a reanalysis of all samples asssociated with the unusable check standard.

NOTE 4.

Deliverables include a package format similar to CLP as per Exhibit B, Section II of the USEPA Contract Lab Program, 10/86 Statement of Work for Organic Analysis including all revisions up to the 7/87 Revision. Deliverables also include:

1. SAS Request Form.
2. All sample and standard chromatograms and quantitation lists.
3. Response factor calculations(initial calibration versus check standards).
4. Method blanks and duplicate chromatograms and quantitation lists.
5. All sample calculations.
6. Instrument run logs.
7. Narrative identifying instrument model, column used and operating parameters.
8. Chain-of-Custody Forms and sample packing list.

SAS

ATTACHMENT # 1

Target Compound List:

601

Chloromethane
Bromomethane
Vinyl Chloride
Chloroethane
Methylene Chloride
1,1-Dichloroethene
1,1-Dichloriethane
Total-1,2-Dichloroethene (trans and cis isomers)
Chloroform
1,2-Dichloroethane
1,1,1-Trichloroethane
Carbon Tetrachloride
Bromodichloromethane
1,1,2,2-Tetrachloroethane
1,2-Dichloropropane
trans-1,3-Dichloropropene
Trichloroethene
Dibromochloromethane
1,1,2-Trichloroethane
cis-1,3-Dichloropropene
Bromoform
Tetrachloroethene
Chlorobenzene

602

Benzene
Toluene
Ethyl Benzene
Xylenes (total)

*Also optional analysis for:

(a) 1,2-dichlorobenzene;
(b) 1,3-dichlorobenzene;
(c) 1,4-dichlorobenzene;
(d) dichlorodifluoromethane (Freon) and
(e) trichlorofluoromethane (Freon)

Please note the first mentioned Freon may coelute with vinyl chloride in this method and result in a false positive analysis.

ATTACHMENT #2

Examples of Actions Related to Data Compliance

A. Example of non-compliance requiring little action: Laboratory notes non-compliance in narrative only, analysis proceeds.

Analysis is for all halocarbons listed in Attachment #1, but trichloroethene is of primary interest. Response factor of Bromodichloromethane changes 30% from initial calibration calculation to check standard response factor calculation. Laboratory must only note non-compliance in narrative.

B. Example of non-compliance requiring DPO/SMO action and intervention:

Analysis is for trichloroethene only. There are samples with positive trichloroethene results. Check standard response factor (>50%) different from initial calibration response factor. Laboratory notifies DPO. SMO requires a new initial calibration and reanalysis of all samples associated with the non-compliant check standard.

Table II Notes:

[1] Polyethylene (P) or Glass (G)

[2] Sample preservation should be performed immediately upon sample collection. For composite chemical samples each aliquot should be preserved at the time of collection. When an automated sampler makes it impossible to preserve each aliquot, then chemical samples may be preserved by maintaining at 4°C until compositing and sample splitting is completed.

[3] When any sample is to be shipped by common carrier or sent through the United States Mails it must comply with the Department of Transportation Hazardous Materials Regulations (49 CFR Part 172). The person offering such material for transportation is responsible for ensuring such compliance. For the preservation requirements of Table II, the Office of Hazardous Materials, Materials Transportation Bureau, Department of Transportation has determined that the Hazardous Materials Regulations do not apply to the following materials: Hydrochloric acid (HCl) in water solutions at concentrations of 0.04% by weight or less (pH about 1.96 or greater); Nitric acid (HNO_3) in water solutions at concentrations of 0.15% by weight or less (pH about 1.62 or greater); Sulfuric acid (H_2SO_4) in water solutions at concentrations of 0.35% by weight or less (pH about 1.15 or greater); and Sodium hydroxide (NaOH) in water solutions at concentrations of 0.080% by weight or less (pH about 12.30 or less).

[4] Samples should be analyzed as soon as possible after collection. The times listed are the maximum times that samples may be held before analysis and still be considered valid. Samples may be held for longer periods only if the permittee, or monitoring laboratory, has data on file to show that the specific types of samples under study are stable for the longer time, and has received a variance from the Regional Administrator under § 136.3(e). Some samples may not be stable to the maximum time period given in the table. A permittee, or monitoring laboratory, is obligated to analyze the sample for a shorter time if knowledge exists to show that this is necessary to maintain sample stability. See § 136.3(e) for details.

[5] Should only be used in the presence of residual chlorine.

[6] Maximum holding time is 24 hours when sulfide is present. Optionally, all samples may be tested with lead acetate paper before pH adjustments in order to determine if sulfide is present. If sulfide is present, it can be removed by the addition of cadmium nitrate powder until a negative spot test is obtained. The sample is filtered and then NaOH is added to pH 12.

[7] Samples should be filtered immediately on-site before adding preservative for dissolved metals.

[8] Guidance applies to samples to be analyzed by GC, LC or GC/Ms for specific compounds.

[9] Sample receiving no pH adjustment must be analyzed within seven days of sampling.

[10] The pH adjustment is not required if acrolein will not be measured. Samples for acrolein receiving no pH adjustment must be analyzed within 3 days of sampling.

[11] When the extractable analytes of concern fall within a single chemical category, the specified preservative and maximum holding times should be observed for optimum safeguard of sample integrity. When the analytes of concern fall within two or more chemical categories, the sample may be preserved by cooling to 4°C, reducing residual chlorine with 0.008% sodium thiosulfate, storing in the dark, and adjusting the pH to 6-9; samples preserved in this manner may be held for seven days before extraction and for forty days after extraction. Exceptions to this optional preservation and holding time procedure are noted in footnote 5 (re the requirement for thiosulfate reduction of residual chlorine) and footnotes 12, 13 (re the analysis of benzidine).

[12] If 1,2-diphenylhydrazine is likely to be present, adjust the pH of the sample to 4.0±0.2 to prevent rearrangement to benzidine.

[13] Extracts may be stored up to 7 days before analysis if storage is conducted under an inert (oxidant-free) atmosphere.

[14] For the analysis of diphenylnitrosamine add 0.008% $Na_2S_2O_3$ and adjust pH to 7-10 with NaOH within 24 hours of sampling.

[15] The pH adjustment may be performed upon receipt at the laboratory and may be omitted if the samples are extracted within 72 hours of collection. For the analysis of aldrin add 0.008% $Na_2S_2O_3$.

8. Appendices A, B, and C are added to Part 136 to read as follows:

APPENDIX A TO PART 136—METHODS FOR ORGANIC CHEMICAL ANALYSIS OF MUNICIPAL AND INDUSTRIAL WASTEWATER.

Method 601—Purgeable Halocarbons

1. Scope and Application

1.1 This method covers the determination of 29 purgeable halocarbons.

The following parameters may be determined by this method:

Parameter	STORET No.	CAS No.
Bromodichloromethane	32101	75-27-4
Bromoform	32104	75-25-2
Bromomethane	34413	74-83-9
Carbon tetrachloride	32102	56-23-5
Chlorobenzene	34301	108-90-7
Chloroethane	34311	75-00-3
2-Chloroethylvinyl ether	34576	100-75-8
Chloroform	32106	67-66-3
Chloromethane	34418	74-87-3
Dibromochloromethane	32105	124-48-1
1,2-Dichlorobenzene	34536	95-50-1
1,3-Dichlorobenzene	34566	541-73-1
1,4-Dichlorobenzene	34571	106-46-7
Dichlorodifluoromethane	34668	75-71-8
1,1-Dichloroethane	34496	75-34-3
1,2-Dichloroethane	34531	107-06-2
1,1-Dichloroethene	34501	75-35-4
trans-1,2-Dichloroethene	34546	156-60-5
1,2-Dichloropropane	34541	78-87-5
cis-1,3-Dichloropropene	34704	10061-01-5
trans-1,3-Dichloropropene	34699	10061-02-6
Methylene chloride	34423	75-09-2
1,1,2,2-Tetrachloroethane	34516	79-34-5
Tetrachloroethene	34475	127-18-4
1,1,1-Trichloroethane	34506	71-55-6
1,1,2-Trichloroethane	34511	79-00-5
Trichloroethene	39180	79-01-6
Trichlorofluoromethane	34488	75-69-4
Vinyl chloride	39175	75-01-4

1.2 This is a purge and trap gas chromatographic (GC) method applicable to the determination of the compounds listed above in municipal and industrial discharges as provided under 40 CFR 136.1. When this method is used to analyze unfamiliar samples for any or all of the compounds above, compound identifications should be supported by at least one additional qualitative technique. This method describes analytical conditions for a second gas chromatographic column that can be used to confirm measurements made with the primary column. Method 624 provides gas chromatograph/mass spectrometer (GC/MS) conditions appropriate for the qualitative and quantitative confirmation of results for most of the parameters listed above.

1.3 The method detection limit (MDL, defined in Section 12.1)[1] for each parameter is listed in Table 1. The MDL for a specific wastewater may differ from those listed, depending upon the nature of interferences in the sample matrix.

1.4 Any modification of this method, beyond those expressly permitted, shall be considered as a major modification subject to application and approval of alternate test procedures under 40 CFR 136.4 and 136.5.

1.5 This method is restricted to use by or under the supervision of analysts experienced in the operation of a purge and trap system and a gas chromatograph and in the interpretation of gas chromatograms. Each analyst must demonstrate the ability to generate acceptable results with this method using the procedure described in Section 8.2.

2. Summary of Method

2.1 An inert gas is bubbled through a 5-mL water sample contained in a specially-designed purging chamber at ambient temperature. The halocarbons are efficiently transferred from the aqueous phase to the vapor phase. The vapor is swept through a sorbent trap where the halocarbons are trapped. After purging is completed, the trap is heated and backflushed with the inert gas to desorb the halocarbons onto a gas chromatographic column. The gas chromatograph is temperature programmed to separate the halocarbons which are then detected with a halide-specific detector.[2,3]

2.2 The method provides an optional gas chromatographic column that may be helpful in resolving the compounds of interest from interferences that may occur.

3. Interferences

3.1 Impurities in the purge gas and organic compounds outgassing from the plumbing ahead of the trap account for the majority of contamination problems. The analytical system must be demonstrated to be free from contamination under the conditions of the analysis by running laboratory reagent blanks as described in Section 8.1.3. The use of non-Teflon plastic tubing, non-Teflon thread sealants, or flow controllers with rubber components in the purge and trap system should be avoided.

3.2 Samples can be contaminated by diffusion of volatile organics (particularly fluorocarbons and methylene chloride) through the septum seal into the sample during shipment and storage. A field reagent blank prepared from reagent water and carried through the sampling and handling protocol can serve as a check on such contamination.

3.3 Contamination by carry-over can occur whenever high level and low level samples are sequentially analyzed. To reduce carry-over, the purging device and sample syringe must be rinsed with reagent water between sample analyses. Whenever an unusually concentrated sample is encountered, it should be followed by an analysis of reagent water to check for cross contamination. For samples containing large amounts of water-soluble materials, suspended solids, high boiling compounds or high organohalide levels, it may be necessary to wash out the purging device with a detergent solution, rinse it with distilled water, and then dry it in a 105°C oven between analyses. The trap and other parts of the system are also subject to contamination; therefore, frequent bakeout and purging of the entire system may be required.

4. Safety

4.1 The toxicity or carcinogenicity of each reagent used in this method has not been precisely defined; however, each chemical compound should be treated as a potential health hazard. From this viewpoint, exposure to these chemicals must be reduced to the lowest possible level by whatever means available. The laboratory is responsible for maintaining a current awareness file of OSHA regulations regarding the safe handling of the chemicals specified in this method. A reference file of material data handling sheets should also be made available to all personnel involved in the chemical analysis. Additional references to laboratory safety are available and have been identified[4,5] for the information of the analyst.

AR 301288

4.2 The following parameters covered by this method have been tentatively classified as known or suspected, human or mammalian carcinogens: carbon tetrachloride, chloroform, 1,4-dichlorobenzene, and vinyl chloride. Primary standards of these toxic compounds should be prepared in a hood. A NIOSH/MESA approved toxic gas respirator should be worn when the analyst handles high concentrations of these toxic compounds.

5. Apparatus and Materials

5.1 Sampling equipment, for discrete sampling.

5.1.1 Vial—25-mL capacity or larger, equipped with a screw cap with a hole in the center (Pierce #13075 or equivalent). Detergent wash, rinse with tap and distilled water, and dry at 105 °C before use.

5.1.2 Septum—Teflon-faced silicone (Pierce #12722 or equivalent). Detergent wash, rinse with tap and distilled water, and dry at 105 °C for 1 h before use.

5.2 Purge and trap system—The purge and trap system consists of three separate pieces of equipment: a purging device, trap, and desorber. Several complete systems are now commercially available.

5.2.1 The purging device must be designed to accept 5-mL samples with a water column at least 3 cm deep. The gaseous head space between the water column and the trap must have a total volume of less than 15 mL. The purge gas must pass through the water column as finely divided bubbles with a diameter of less than 3 mm at the origin. The purge gas must be introduced no more than 5 mm from the base of the water column. The purging device illustrated in Figure 1 meets these design criteria.

5.2.2 The trap must be at least 25 cm long and have an inside diameter of at least 0.105 in. The trap must be packed to contain the following minimum lengths of adsorbents: 1.0 cm of methyl silicone coated packing (Section 6.3.3), 7.7 cm of 2,6-diphenylene oxide polymer (Section 6.3.2), 7.7 cm of silica gel (Section 6.3.4), 7.7 cm of coconut charcoal (Section 6.3.1). If it is not necessary to analyze for dichlorodifluoromethane, the charcoal can be eliminated, and the polymer section lengthened to 15 cm. The minimum specifications for the trap are illustrated in Figure 2.

5.2.3 The desorber must be capable of rapidly heating the trap to 180 °C. The polymer section of the trap should not be heated higher than 180 °C and the remaining sections should not exceed 200 °C. The desorber illustrated in Figure 2 meets these design criteria.

5.2.4 The purge and trap system may be assembled as a separate unit or be coupled to a gas chromatograph as illustrated in Figures 3 and 4.

5.3 Gas chromatograph—An analytical system complete with a temperature programmable gas chromatograph suitable for on-column injection and all required accessories including syringes, analytical columns, gases, detector, and strip-chart recorder. A data system is recommended for measuring peak areas.

5.3.1 Column 1—8 ft long x 0.1 in. ID stainless steel or glass, packed with 1% SP-1000 on Carbopack B (60/80 mesh) or equivalent. This column was used to develop the method performance statements in Section 12. Guidelines for the use of alternate column packings are provided in Section 10.1.

5.3.2 Column 2—6 ft long x 0.1 in. ID stainless steel or glass, packed with chemically bonded n-octane on Porasil-C (100/120 mesh) or equivalent.

5.3.3 Detector—Electrolytic conductivity or microcoulometric detector. These types of detectors have proven effective in the analysis of wastewaters for the parameters listed in the scope (Section 1.1). The electrolytic conductivity detector was used to develop the method performance statements in Section 12. Guidelines for the use of alternate detectors are provided in Section 10.1.

5.4 Syringes—5-mL glass hypodermic with Luerlok tip (two each), if applicable to the purging device.

5.5 Micro syringes—25-µL, 0.006 in. ID needle.

5.6 Syringe valve—2-way, with Luer ends (three each).

5.7 Syringe—5-mL, gas-tight with shut-off valve.

5.8 Bottle—15-mL, screw-cap, with Teflon cap liner.

5.9 Balance—Analytical, capable of accurately weighing 0.0001 g.

6. Reagents

6.1 Reagent water—Reagent water is defined as a water in which an interferent is not observed at the MDL of the parameters of interest.

6.1.1 Reagent water can ge generated by passing tap water through a carbon filter bed containing about 1 lb of activated carbon (Filtrasorb-300, Calgon Corp., or equivalent).

6.1.2 A water purification system (Millipore Super-Q or equivalent) may be used to generate reagent water.

6.1.3 Reagent water may also be prepared by boiling water for 15 min. Subsequently, while maintaining the temperature at 90 °C, bubble a contaminant-free inert gas through the water for 1 h. While still hot, transfer the water to a narrow mouth screw-cap bottle and seal with a Teflon-lined septum and cap.

6.2 Sodium thiosulfate—(ACS) Granular.

6.3 Trap Materials:

6.3.1 Coconut charcoal—6/10 mesh sieved to 26 mesh. Barnebey Cheney, CA-580-26 lot # M-2649 or equivalent.

6.3.2 2,6-Diphenylene oxide polymer—Tenax, (60/80 mesh), chromatographic grade or equivalent.

6.3.3 Methyl silicone packing—3% OV-1 on Chromosorb-W (60/80 mesh) or equivalent.

6.3.4 Silica gel—35/60 mesh, Davison, grade-15 or equivalent.

6.4 Methanol—Pesticide quality or equivalent.

6.5 Stock standard solutions—Stock standard solutions may be prepared from pure standard materials or purchased as certified solutions. Prepare stock standard solutions in methanol using assayed liquids or gases as appropriate. Because of the toxicity of some of the organohalides, primary dilutions of these materials should be prepared in a hood. A NIOSH/MESA approved toxic gas respirator should be used when the analyst handles high concentrations of such materials.

6.5.1 Place about 9.8 mL of methanol into a 10-mL ground glass stoppered volumetric flask. Allow the flask to stand, unstoppered, for about 10 min or until all alcohol wetted surfaces have dried. Weigh the flask to the nearest 0.1 mg.

6.5.2 Add the assayed reference material:

6.5.2.1 Liquid—Using a 100 µL syringe, immediately add two or more drops of assayed reference material to the flask, then reweigh. Be sure that the drops fall directly into the alcohol without contacting the neck of the flask.

6.5.2.2 Gases—To prepare standards for any of the six halocarbons that boil below 30 °C (bromomethane, chloroethane, chloromethane, dichlorodifluoromethane, trichlorofluoromethane, vinyl chloride), fill a 5-mL valved gas-tight syringe with the reference standard to the 5.0-mL mark. Lower the needle to 5 mm above the methanol meniscus. Slowly introduce the reference standard above the surface of the liquid (the heavy gas will rapidly dissolve into the methanol).

6.5.3 Reweigh, dilute to volume, stopper, then mix by inverting the flask several times. Calculate the concentration in µg/µL from the net gain in weight. When compound purity is assayed to be 96% or greater, the weight can be used without correction to calculate the concentration of the stock standard. Commercially prepared stock standards can be used at any concentration if they are certified by the manufacturer or by an independent source.

6.5.4 Transfer the stock standard solution into a Teflon-sealed screw-cap bottle. Store, with minimal headspace, at −10 to −20 °C and protect from light.

6.5.5 Prepare fresh standards weekly for the six gases and 2-chloroethylvinyl ether. All other standards must be replaced after one month, or sooner if comparison with check standards indicates a problem.

6.6 Secondary dilution standards—Using stock standard solutions, prepare secondary dilution standards in methanol that contain the compounds of interest, either singly or mixed together. The secondary dilution standards should be prepared at concentrations such that the aqueous calibration standards prepared in Sections 7.3.1 or 7.4.1 will bracket the working range of the analytical system. Secondary dilution standards should be stored with minimal headspace and should be checked frequently for signs of degradation or evaporation, especially just prior to preparing calibration standards from them.

6.7 Quality control check sample concentrate—See Section 8.2.1.

7. Calibration

7.1 Assemble a purge and trap system that meets the specifications in Section 5.2. Condition the trap overnight at 180 °C by backflushing with an inert gas flow of at least 20 mL/min. Condition the trap for 10 min once daily prior to use.

7.2 Connect the purge and trap system to a gas chromatograph. The gas chromatograph must be operated using temperature and flow

AR 301289

AR 301289

rate conditions equivalent to those given in Table 1. Calibrate the purge and trap-gas chromatographic system using either the external standard technique (Section 7.3) or the internal standard technique (Section 7.4).

7.3 External standard calibration procedure:

7.3.1 Prepare calibration standards at a miminum of three concentration levels for each parameter by carefully adding 20.0 µL of one or more secondary dilution standards to 100, 500, or 1000 mL of reagent water. A 25-µL syringe with a 0.006 in. ID needle should be used for this operation. One of the external standards should be at a concentration near, but above, the MDL (Table 1) and the other concentrations should correspond to the expected range of concentrations found in real samples or should define the working range of the detector. These aqueous standards can be stored up to 24 h, if held in sealed vials with zero headspace as described in Section 9.2. If not so stored, they must be discarded after 1 h.

7.3.2 Analyze each calibration standard according to Section 10, and tabulate peak height or area responses versus the concentration in the standard. The results can be used to prepare a calibration curve for each compound. Alternatively, if the ratio of response to concentration (calibration factor) is a constant over the working range (<10% relative standard deviation, RSD), linearity through the origin can be assumed and the average ratio or calibration factor can be used in place of a calibration curve.

7.4 Internal standard calibration procedure—To use this approach, the analyst must select one or more internal standards that are similar in analytical behavior to the compounds of interest. The analyst must further demonstrate that the measurement of the internal standard is not affected by method or matrix interferences. Because of these limitations, no internal standard can be suggested that is applicable to all samples. The compounds recommended for use as surrogate spikes in Section 8.7 have been used successfully as internal standards, because of their generally unique retention times.

7.4.1 Prepare calibration standards at a minimum of three concentration levels for each parameter of interest as described in Section 7.3.1.

7.4.2 Prepare a spiking solution containing each of the internal standards using the procedures described in Sections 8.3 and 8.6. It is recommended that the secondary dilution standard be prepared at a concentration of 15 µg/mL of each internal standard compound. The addition of 10 µL of this standard to 3.0 mL of sample or calibration standard would be equivalent to 50 µg/L.

7.4.3 Analyze each calibration standard according to Section 10, adding 10 µL of internal standard spiking solution directly to the syringe (Section 10.4). Tabulate peak height or area responses against concentration for each compound and internal standard, and calculate response factors (RF) for each compound using Equation 1.

Equation 1.

$$RF = \frac{(A_s)(C_{is})}{(A_{is})(C_s)}$$

where:

A_s = Response for the parameter to be measured.

A_{is} = Response for the internal standard.

C_{is} = Concentration of the internal standard.

C_s = Concentration of the parameter to be measured.

If the RF value over the working range is a constant (<10% RSD), the RF can be assumed to be invariant and the average RF can be used for calculations. Alternatively, the results can be used to plot a calibration curve of response ratios, A_s/A_{is}, vs. RF.

7.5 The working calibration curve, calibration factor, or RF must be verified on each working day by the measurement of a QC check sample.

7.5.1 Prepare the QC check sample as described in Section 8.2.2.

7.5.2 Analyze the QC check sample according to Section 10.

7.5.3 For each parameter, compare the response (Q) with the corresponding calibration acceptance criteria found in Table 2. If the responses for all parameters of interest fall within the designated ranges, analysis of actual samples can begin. If any individual Q falls outside the range, proceed according to Section 7.5.4.

Note: The large number of parameters in Table 2 present a substantial probability that one or more will not meet the calibration acceptance criteria when all parameters are analyzed.

7.5.4 Repeat the test only for those parameters that failed to meet the calibration acceptance criteria. If the response for a parameter does not fall within the range in this second test, a new calibration curve, calibration factor, or RF must be prepared for that parameter according to Section 7.3 or 7.4.

8. *Quality Control*

8.1 Each laboratory that uses this method is required to operate a formal quality control program. The minimum requirements of this program consist of an initial demonstration of laboratory capability and an ongoing analysis of spiked samples to evaluate and document data quality. The laboratory must maintain records to document the quality of data that is generated. Ongoing data quality checks are compared with established performance criteria to determine if the results of analyses meet the performance characteristics of the method. When results of sample spikes indicate atypical method performance, a quality control check standard must be analyzed to confirm that the measurements were performed in an in-control mode of operation.

8.1.1 The analyst must make an initial, one-time, demonstration of the ability to generate acceptable accuracy and precision with this method. This ability is established as described in Section 8.2.

8.1.2 In recognition of advances that are occurring in chromatography, the analyst is permitted certain options (detailed in Section 10.1) to improve the separations or lower the cost of measurements. Each time such a modification is made to the method, the analyst is required to repeat the procedure in Section 8.2.

8.1.3 Each day, the analyst must analyze a reagent water blank to demonstrate that interferences from the analytical system are under control.

8.1.4 The laboratory must, on an ongoing basis, spike and analyze a minimum of 10% of all samples to monitor and evaluate laboratory data quality. This procedure is described in Section 8.3.

8.1.5 The laboratory must, on an ongoing basis, demonstrate through the analyses of quality control check standards that the operation of the measurement system is in control. This procedure is described in Section 8.4. The frequency of the check standard analyses is equivalent to 10% of all samples analyzed but may be reduced if spike recoveries from samples (Section 8.3) meet all specified quality control criteria.

8.1.6 The laboratory must maintain performance records to document the quality of data that is generated. This procedure is described in Section 8.5.

8.2 To establish the ability to generate acceptable accuracy and precision, the analyst must perform the following operations.

8.2.1 A quality control (QC) check sample concentrate is required containing each parameter of interest at a concentration of 10 µg/mL in methanol. The QC check sample concentrate must be obtained from the U.S. Environmental Protection Agency, Environmental Monitoring and Support Laboratory in Cincinnati, Ohio, if available. If not available from that source, the QC check sample concentrate must be obtained from another external source. If not available from either source above, the QC check sample concentrate must be prepared by the laboratory using stock standards prepared independently from those used for calibration.

8.2.2 Prepare a QC check sample to contain 20 µg/L of each parameter by adding 200 µL of QC check sample concentrate to 100 mL of reagent water.

8.2.3 Analyze four 5-mL aliquots of the well-mixed QC check sample according to Section 10.

8.2.4 Calculate the average recovery ($\bar{X}$) in µg/L, and the standard deviation of the recovery (s) in µg/L, for each parameter of interest using the four results.

8.2.5 For each parameter compare s and $\bar{X}$ with the corresponding acceptance criteria for precision and accuracy, respectively, found in Table 2. If s and $\bar{X}$ for all parameters of interest meet the acceptance criteria, the system performance is acceptable and analysis of actual samples can begin. If any individual s exceeds the precision limit or any individual $\bar{X}$ falls outside the range for accuracy, then the system performance is unacceptable for that parameter.

Note: The large number of parameters in Table 2 present a substantial probability that one or more will fail at least one of the acceptance criteria when all parameters are analyzed.

8.2.6 When one or more of the parameters tested fail at least one of the acceptance

AR 301290

criteria, the analyst must proceed according to Section 8.2.6.1 or 8.2.6.2.

8.2.6.1 Locate and correct the source of the problem and repeat the test for all parameters of interest beginning with Section 8.2.3.

8.2.6.2 Beginning with Section 8.2.3, repeat the test only for those parameters that failed to meet criteria. Repeated failure, however, will confirm a general problem with the measurement system. If this occurs, locate and correct the source of the problem and repeat the test for all compounds of interest beginning with Section 8.2.3.

8.3 The laboratory must, on an ongoing basis, spike at least 10% of the samples from each sample site being monitored to assess accuracy. For laboratories analyzing one to ten samples per month, at least one spiked sample per month is required.

8.3.1 The concentration of the spike in the sample should be determined as follows:

8.3.1.1 If, as in compliance monitoring, the concentration of a specific parameter in the sample is being checked against a regulatory concentration limit, the spike should be at that limit or 1 to 5 times higher than the background concentration determined in Section 8.3.2, whichever concentration would be larger.

8.3.1.2 If the concentration of a specific parameter in the sample is not being checked against a limit specific to that parameter, the spike should be at 20 µg/L or 1 to 5 times higher than the background concentration determined in Section 8.3.2, whichever concentration would be larger.

8.3.2 Analyze one 5-mL sample aliquot to determine the background concentration (B) of each parameter. If necessary, prepare a new QC check sample concentrate (Section 8.2.1) appropriate for the background concentrations in the sample. Spike a second 5-mL sample aliquot with 10 µL of the QC check sample concentrate and analyze it to determine the concentration after spiking (A) of each parameter. Calculate each percent recovery (P) as 100(A-B)%/T, where T is the known true value of the spike.

8.3.3 Compare the percent recovery (P) for each parameter with the corresponding QC acceptance criteria found in Table 2. These acceptance criteria were calculated to include an allowance for error in measurement of both the background and spike concentrations, assuming a spike to background ratio of 5:1. This error will be accounted for to the extent that the analyst's spike to background ratio approaches 5:1.[7] If spiking was performed at a concentration lower than 20 µg/L, the analyst must use either the QC acceptance criteria in Table 2, or optional QC acceptance criteria calculated for the specific spike concentration. To calculate optional acceptance criteria for the recovery of a parameter: (1) Calculate accuracy (X') using the equation in Table 3, substituting the spike concentration (T) for C; (2) calculate overall precision (S') using the equation in Table 3, substituting X' for $\bar{X}$; (3) calculate the range for recovery at the spike concentration as (100 X'/T)±2.44(100 S'/T)%.[7]

8.3.4 If any individual P falls outside the designated range for recovery, that parameter has failed the acceptance criteria. A check standard containing each parameter that failed the criteria must be analyzed as described in Section 8.4.

8.4 If any parameter fails the acceptance criteria for recovery in Section 8.3, a QC check standard containing each parameter that failed must be prepared and analyzed.

Note: The frequency for the required analysis of a QC check standard will depend upon the number of parameters being simultaneously tested, the complexity of the sample matrix, and the performance of the laboratory. If the entire list of parameters in Table 2 must be measured in the sample in Section 8.3, the probability that the analysis of a QC check standard will be required is high. In this case the QC check standard should be routinely analyzed with the spiked sample.

8.4.1 Prepare the QC check standard by adding 10 µL of QC check sample concentrate (Sections 8.2.1 or 8.3.2) to 5 mL of reagent water. The QC check standard needs only to contain the parameters that failed criteria in the test in Section 8.3.

8.4.2 Analyze the QC check standard to determine the concentration measured (A) of each parameter. Calculate each percent recovery (P_s) as 100 (A/T)%, where T is the true value of the standard concentration.

8.4.3 Compare the percent recovery (P_s) for each parameter with the corresponding QC acceptance criteria found in Table 2. Only parameters that failed the test in Section 8.3 need to be compared with these criteria. If the recovery of any such parameter falls outside the designated range, the laboratory performance for that parameter is judged to be out of control, and the problem must be immediately identified and corrected. The analytical result for that parameter in the unspiked sample is suspect and may not be reported for regulatory compliance purposes.

8.5 As part of the QC program for the laboratory, method accuracy for wastewater samples must be assessed and records must be maintained. After the analysis of five spiked wastewater samples as in Section 8.3, calculate the average percent recovery ($\bar{P}$) and the standard deviation of the percent recovery (s_p). Express the accuracy assessment as a percent recovery interval from $\bar{P}-2s_p$ to $\bar{P}+2s_p$. If $\bar{p}=90\%$ and $s_p=10\%$, for example, the accuracy interval is expressed as 70–110%. Update the accuracy assessment for each parameter on a regular basis (e.g. after each five to ten new accuracy measurements).

8.6 It is recommended that the laboratory adopt additional quality assurance practices for use with this method. The specific practices that are most productive depend upon the needs of the laboratory and the nature of the samples. Field duplicates may be analyzed to assess the precision of the environmental measurements. When doubt exists over the identification of a peak on the chromatogram, confirmatory techniques such as gas chromatography with a dissimilar column, specific element detector, or mass spectrometer must be used. Whenever possible, the laboratory should analyze standard reference materials and participate in relevant performance evaluation studies.

8.7 The analyst should monitor both the performance of the analytical system and the effectiveness of the method in dealing with each sample matrix by spiking each sample, standard, and reagent water blank with surrogate halocarbons. A combination of bromochloromethane, 2-bromo-1-chloropropane, and 1,4-dichlorobutane is recommended to encompass the range of the temperature program used in this method. From stock standard solutions prepared as in Section 6.5, add a volume to give 750 µg of each surrogate to 45 mL of reagent water contained in a 50-mL volumetric flask, mix and dilute to volume for a concentration of 15 ng/µL. Add 10 µL of this surrogate spiking solution directly into the 5-mL syringe with every sample and reference standard analyzed. Prepare a fresh surrogate spiking solution on a weekly basis. If the internal standard calibration procedure is being used, the surrogate compounds may be added directly to the internal standard spiking solution (Section 7.4.2).

9. Sample Collection, Preservation, and Handling

9.1 All samples must be iced or refrigerated from the time of collection until analysis. If the sample contains free or combined chlorine, add sodium thiosulfate preservative (10 mg/40 mL is sufficient for up to 5 ppm Cl_2) to the empty sample bottle just prior to shipping to the sampling site. EPA Methods 330.4 and 330.5 may be used for measurement of residual chlorine.[8] Field test kits are available for this purpose.

9.2 Grab samples must be collected in glass containers having a total volume of at least 25 mL. Fill the sample bottle just to overflowing in such a manner that no air bubbles pass through the sample as the bottle is being filled. Seal the bottle so that no air bubbles are entrapped in it. If preservative has been added, shake vigorously for 1 min. Maintain the hermetic seal on the sample bottle until time of analysis.

9.3 All samples must be analyzed within 14 days of collection.[9]

10. Procedure

10.1 Table 1 summarizes the recommended operating conditions for the gas chromatograph. Included in this table are estimated retention times and MDL that can be achieved under these conditions. An example of the separations achieved by Column 1 is shown in Figure 5. Other packed columns, chromatographic conditions, or detectors may be used if the requirements of Section 8.2 are met.

10.2 Calibrate the system daily as described in Section 7.

10.3 Adjust the purge gas (nitrogen or helium) flow rate to 40 mL/min. Attach the trap inlet to the purging device, and set the purge and trap system to purge (Figure 3). Open the syringe valve located on the purging device sample introduction needle.

10.4 Allow the sample to come to ambient temperature prior to introducing it to the syringe. Remove the plunger from a 5-mL syringe and attach a closed syringe valve. Open the sample bottle (or standard) and carefully pour the sample into the syringe barrel to just short of overflowing. Replace the syringe plunger and compress the sample. Open the syringe valve and vent any residual

air while adjusting the sample volume to 5.0 mL. Since this process of taking an aliquot destroys the validity of the sample for future analysis, the analyst should fill a second syringe at this time to protect against possible loss of data. Add 10.0 µL of the surrogate spiking solution (Section 8.7) and 10.0 µL of the internal standard spiking solution (Section 7.4.2), if applicable, through the valve bore, then close the valve.

10.5 Attach the syringe-syringe valve assembly to the syringe valve on the purging device. Open the syringe valves and inject the sample into the purging chamber.

10.6 Close both valves and purge the sample for 11.0±0.1 min at ambient temperature.

10.7 After the 11-min purge time, attach the trap to the chromatograph, adjust the purge and trap system to the desorb mode (Figure 4), and begin to temperature program the gas chromatograph. Introduce the trapped materials to the GC column by rapidly heating the trap to 180 °C while backflushing the trap with an inert gas between 20 and 60 mL/min for 4 min. If rapid heating of the trap cannot be achieved, the GC column must be used as a secondary trap by cooling it to 30 °C (subambient temperature, if poor peak geometry or random retention time problems persist) instead of the initial program temperature of 45 °C.

10.8 While the trap is being desorbed into the gas chromatograph, empty the purging chamber using the sample introduction syringe. Wash the chamber with two 5-mL flushes of reagent water.

10.9 After desorbing the sample for 4 min, condition the trap by returning the purge and trap system to the purge mode. Wait 15 s then close the syringe valve on the purging device to begin gas flow through the trap. The trap temperature should be maintained at 180 °C. After approximately 7 min, turn off the trap heater and open the syringe valve to stop the gas flow through the trap. When the trap is cool, the next sample can be analyzed.

10.10 Identify the parameters in the sample by comparing the retention times of the peaks in the sample chromatogram with those of the peaks in standard chromatograms. The width of the retention time window used to make identifications should be based upon measurements of actual retention time variations of standards over the course of a day. Three times the standard deviation of a retention time for a compound can be used to calculate a suggested window size; however, the experience of the analyst should weigh heavily in the interpretation of chromatograms.

10.11 If the response for a peak exceeds the working range of the system, prepare a dilution of the sample with reagent water from the aliquot in the second syringe and reanalyze.

11. Calculations

11.1 Determine the concentration of individual compounds in the sample.

11.1.1 If the external standard calibration procedure is used, calculate the concentration of the parameter being measured from the peak response using the calibration curve or calibration factor determined in Section 7.3.2.

11.1.2 If the internal standard calibration procedure is used, calculate the concentration in the sample using the response factor (RF) determined in Section 7.4.3 and Equation 2.

Equation 2.

$$\text{Concentration } (\mu g/L) = \frac{(A_s)(C_{is})}{(A_{is})(RF)}$$

where:

A_s = Response for the parameter to be measured.

A_{is} = Response for the internal standard.

C_{is} = Concentration of the internal standard.

11.2 Report results in µg/L without correction for recovery data. All QC data obtained should be reported with the sample results.

12. Method Performance

12.1 The method detection limit (MDL) is defined as the minimum concentration of a substance that can be measured and reported with 99% confidence that the value is above zero.[1] The MDL concentrations listed in Table 1 were obtained using reagent water.[9] Similar results were achieved using representative wastewaters. The MDL actually achieved in a given analysis will vary depending on instrument sensitivity and matrix effects.

12.2 This method is recommended for use in the concentration range from the MDL to 1000×MDL. Direct aqueous injection techniques should be used to measure concentration levels above 1000×MDL.

12.3 This method was tested by 20 laboratories using reagent water, drinking water, surface water, and three industrial wastewaters spiked at six concentrations over the range 8.0 to 500 µg/L.[9] Single operator precision, overall precision, and method accuracy were found to be directly related to the concentration of the parameter and essentially independent of the sample matrix. Linear equations to describe these relationships are presented in Table 3.

References

1. 40 CFR Part 136, Appendix B.
2. Bellar, T.A., and Lichtenberg, J.J. "Determining Volatile Organics at Microgram-per-Litre-Levels by Gas Chromatography," *Journal of the American Water Works Association*, 66, 739 (1974).
3. Bellar, T.A., and Lichtenberg, J.J. "Semi-Automated Headspace Analysis of Drinking Waters and Industrial Waters for Purgeable Volatile Organic Compounds." Proceedings from Symposium on Measurement of Organic Pollutants in Water and Wastewater, American Society for Testing and Materials, STP 686, C.E. Van Hall, editor, 1978.
4. "Carcinogens—Working With Carcinogens," Department of Health, Education, and Welfare, Public Health Service, Center for Disease Control, National Institute for Occupational Safety and Health, Publication No. 77-206, August 1977.
5. "OSHA Safety and Health Standards, General Industry" (29 CFR 1910), Occupational Safety and Health Administration, OSHA 2206 (Revised, January 1976).
6. "Safety in Academic Chemistry Laboratories," American Chemical Society Publication, Committee on Chemical Safety, 3rd Edition, 1979.
7. Provost, L.P., and Elder, R.S. "Interpretation of Percent Recovery Data," *American Laboratory*, 15, 58-63 (1983). (The value 2.44 used in the equation in Section 8.3.3 is two times the value 1.22 derived in this report.)
8. "Methods 330.4 (Titrimetric, DPD-FAS) and 330.5 (Spectrophotometric, DPD) for Chlorine, Total Residual," Methods for Chemical Analysis of Water and Wastes, EPA 600/4-79-020, U.S. Environmental Protection Agency, Environmental Monitoring and Support Laboratory, Cincinnati, Ohio 45268, March 1979.
9. "EPA Method Validation Study 23, Method 601 (Purgeable Halocarbons)," Report for EPA Contract 68-03-2856 (in preparation).
10. "Method Validation Data for EPA Method 601," Memorandum from B. Potter, U.S. Environmental Protection Agency, Environmental Monitoring and Support Laboratory, Cincinnati, Ohio 45268, November 10, 1983.

TABLE 1.—CHROMATOGRAPHIC CONDITIONS AND METHOD DETECTION LIMITS

Parameter	Retention time (min)		Method detection limit (µg/L)
	Column 1	Column 2	
Chloromethane	1.50	8.38	0.08
Bromomethane	2.17	7.05	1.18
Dichlorodifluoromethane	2.88	nd	0.41
Vinyl chloride	2.67	8.38	0.18
[illegible]oroethane	3.33	8.60	0.52
[illegible]thylene chloride	8.25	10.1	0.28
[illegible]ichlorofluoromethane	7.18	nd	nd
[illegible]-Dichloroethene	7.98	7.72	0.13
1,1-Dichloroethane	8.30	12.6	0.07
trans-1,2-Dichloroethene	10.1	8.38	0.19

AR301292

TABLE 1.—CHROMATOGRAPHIC CONDITIONS AND METHOD DETECTION LIMITS—Continued

Parameter	Retention time (min)		Method detection limit (µg/L)
	Column 1	Column 2	
Chloroform	10.7	12.1	0.06
1,2-Dichloroethane	11.4	15.4	0.03
1,1,1-Trichloroethane	12.6	13.1	0.03
Carbon tetrachloride	13.0	14.4	0.12
Bromodichloromethane	13.7	14.6	0.10
1,2-Dichloropropane	14.8	16.6	0.04
cis-1,3-Dichloropropene	15.2	16.6	0.34
Trichloroethene	15.6	13.1	0.12
Dibromochloromethane	16.5	16.6	0.09
1,1,2-Trichloroethane	16.5	16.1	0.02
trans-1,3-Dichloropropene	16.5	16.0	0.20
2-Chloroethylvinyl ether	18.0	nd	0.13
Bromoform	19.2	19.2	0.20
1,1,2,2-Tetrachloroethane	21.6	nd	0.03
Tetrachloroethene	21.7	15.0	0.03
Chlorobenzene	24.2	16.6	0.25
1,3-Dichlorobenzene	34.0	22.4	0.32
1,2-Dichlorobenzene	34.6	23.5	0.15
1,4-Dichlorobenzene	36.4	22.3	0.24

Column 1 conditions: Carbopack B (80/90 mesh) coated with 1% SP-1000 packed in an 8 ft x 0.1 in. ID stainless steel or glass column with helium carrier gas at 40 mL/min flow rate. Column temperature held at 45 °C for 3 min then programmed at 8 °C/min to 220 °C and held for 15 min.

Column 2 conditions: Porapak-Q (100/120 mesh) coated with n-octane packed in a 8 ft x 0.1 in. ID stainless steel or glass column with helium carrier gas at 40 mL/min flow rate. Column temperature held at 50 °C for 3 min then programmed at 8 °C/min to 170 °C and held for 4 min.

nd = not determined.

TABLE 2.—CALIBRATION AND QC ACCEPTANCE CRITERIA—METHOD 601 *

Parameter	Range for Q (µg/L)	Limit for s (µg/L)	Range for $\bar{X}$ (µg/L)	Range P, P_s (%)
Bromodichloromethane	15.2-24.8	4.3	10.7-32.0	42-172
Bromoform	14.7-25.3	4.7	5.0-29.3	13-159
Bromomethane	11.7-28.3	7.8	3.6-34.8	D-144
Carbon tetrachloride	13.7-26.3	5.6	11.8-25.3	43-143
Chlorobenzene	14.4-25.6	5.0	10.2-27.4	38-150
Chloroethane	15.4-24.6	4.4	11.3-25.2	46-137
2-Chloroethylvinyl ether	12.0-28.0	6.3	4.5-35.5	14-186
Chloroform	15.0-25.0	4.5	12.4-24.0	49-133
Chloromethane	11.8-28.1	7.4	D-34.8	D-183
Dibromochloromethane	13.1-26.8	6.3	7.8-36.1	24-181
1,2-Dichlorobenzene	14.0-26.0	5.5	1.7-38.8	D-208
1,3-Dichlorobenzene	8.8-30.1	8.1	6.2-32.6	7-187
1,4-Dichlorobenzene	13.8-26.1	5.5	11.5-25.5	42-143
1,1-Dichloroethane	16.8-23.2	3.2	11.2-24.6	47-132
1,2-Dichloroethane	14.3-25.7	5.2	13.0-28.5	51-147
1,1-Dichloroethene	12.6-27.4	6.6	10.2-27.3	38-167
trans-1,2-Dichloroethene	12.8-27.2	6.4	11.4-27.1	39-156
1,2-Dichloropropane	14.8-25.2	5.2	10.1-29.9	44-156
cis-1,3-Dichloropropene	12.8-27.2	7.3	6.3-33.8	23-178
trans-1,3-Dichloropropene	12.8-27.2	7.3	6.3-33.8	23-178
Methylene chloride	15.9-24.6	4.0	7.0-27.6	25-162
1,1,2,2-Tetrachloroethane	8.8-30.2	8.2	6.6-31.8	8-184
Tetrachloroethene	14.0-26.0	5.4	6.1-29.8	39-162
1,1,1-Trichloroethane	14.2-25.8	4.8	10.8-24.6	41-138
1,1,2-Trichloroethane	15.7-24.3	3.9	8.8-25.4	39-136
Trichloroethene	15.4-24.6	4.2	8.2-28.6	26-148
Trichlorofluoromethane	13.3-26.7	6.0	7.4-28.1	21-156
Vinyl chloride	13.7-26.3	5.7	8.2-29.9	29-183

Q = Concentration measured in QC check sample, in µg/L (Section 7.5.3).
s = Standard deviation of four recovery measurements, in µg/L (Section 8.2.6).
$\bar{X}$ = Average recovery for four recovery measurements, in µg/L (Section 8.2.6).
P, P_s = Percent recovery measured (Section 8.3.2, Section 8.4.2).
D = Detected; result must be greater than zero.
* Criteria were calculated assuming a QC check sample concentration of 20 µg/L.

Note: These criteria are based directly upon the method performance data in Table 3. Where necessary, the limits for recovery have been broadened to assure applicability of the limits to concentrations below those used to develop Table 3.

TABLE 3.—METHOD ACCURACY AND PRECISION AS FUNCTIONS OF CONCENTRATION—METHOD 601

Parameter	Accuracy, as recovery, $\bar{X}'$ (µg/L)	Single analyst precision, s_r' (µg/L)	Overall precision, S' (µg/L)
Bromodichloromethane	1.12C−1.02	0.11$\bar{X}$+0.04	0.20$\bar{X}$+1.00
Bromoform	0.98C−2.06	0.12$\bar{X}$+[illegible]	0.21$\bar{X}$+2.41
Bromomethane	0.78C−1.27	0.28$\bar{X}$+0.27	0.36$\bar{X}$+0.84
Carbon tetrachloride	0.89C−1.04	0.15$\bar{X}$+0.38	0.20$\bar{X}$+0.38
Chlorobenzene	1.00C−1.23	0.15$\bar{X}$−0.02	0.18$\bar{X}$+1.21
Chloroethane	0.98C−1.63	0.14$\bar{X}$−0.13	0.17$\bar{X}$+0.63
2-Chloroethylvinyl ether *	1.00C	0.20$\bar{X}$	0.36$\bar{X}$
Chloroform	0.93C−0.39	0.13$\bar{X}$+0.16	0.18$\bar{X}$−0.02
Chloromethane	0.77C+0.16	0.28$\bar{X}$−0.31	0.52$\bar{X}$+1.31
Dibromochloromethane	0.84C+2.72	0.11$\bar{X}$+1.10	0.24$\bar{X}$+1.68
1,2-Dichlorobenzene	0.93C+1.70	0.20$\bar{X}$+0.37	0.13$\bar{X}$+0.13

A 293

AR 301293

TABLE 3.—METHOD ACCURACY AND PRECISION AS FUNCTIONS OF CONCENTRATION—METHOD 601—Continued

Parameter	Accuracy, as recovery, $\bar{X}'$ (µg/L)	Single analyst precision, s_r' (µg/L)	Overall precision, S' (µg/L)
1,3-Dichlorobenzene	0.95C+0.43	0.14$\bar{X}$+2.33	0.26$\bar{X}$+2.34
1,4-Dichlorobenzene	0.93C−0.09	0.15$\bar{X}$+0.29	0.20$\bar{X}$+0.41
1,1-Dichloroethane	0.95C−1.08	0.08$\bar{X}$+0.17	0.14$\bar{X}$+0.94
1,2-Dichloroethane	1.04C−1.08	0.11$\bar{X}$+0.79	0.15$\bar{X}$+0.94
1,1-Dichloroethene	0.98C−0.87	0.21$\bar{X}$−0.23	0.29$\bar{X}$−0.40
trans-1,2-Dichloroethene	0.97C−0.18	0.11$\bar{X}$+1.48	0.17$\bar{X}$+1.48
1,2-Dichloropropane[a]	1.00C	0.13$\bar{X}$	0.23$\bar{X}$
cis-1,3-Dichloropropene[a]	1.00C	0.18$\bar{X}$	0.32$\bar{X}$
trans-1,3-Dichloropropene[a]	1.00C	0.18$\bar{X}$	0.32$\bar{X}$
Methylene chloride	0.91C−0.83	0.11$\bar{X}$+0.33	0.21$\bar{X}$+1.43
1,1,2,2-Tetrachloroethane	0.95C+0.19	0.14$\bar{X}$+2.41	0.22$\bar{X}$+2.79
Tetrachloroethene	0.94C+0.08	0.14$\bar{X}$+0.38	0.18$\bar{X}$+2.21
1,1,1-Trichloroethane	0.90C−0.16	0.15$\bar{X}$+0.04	0.20$\bar{X}$+0.37
1,1,2-Trichloroethane	0.96C+0.38	0.13$\bar{X}$−0.14	0.19$\bar{X}$+0.87
Trichloroethene	0.87C+0.48	0.13$\bar{X}$−0.03	0.23$\bar{X}$+0.30
Trichlorofluoromethane	0.89C−0.07	0.15$\bar{X}$+0.67	0.26$\bar{X}$+0.91
Vinyl chloride	0.87C−0.38	0.13$\bar{X}$+0.66	0.27$\bar{X}$+0.40

$\bar{X}'$ = Expected recovery for one or more measurements of a sample containing a concentration of C, in µg/L.
s_r' = Expected single analyst standard deviation of measurements at an average concentration found of $\bar{X}$, in µg/L.
S' = Expected interlaboratory standard deviation of measurements at an average concentration found of $\bar{X}$, in µg/L.
C = True value for the concentration, in µg/L.
$\bar{X}$ = Average recovery found for measurements of samples containing a concentration of C, in µg/L.
[a] Estimates based upon the performance in a single laboratory.[16]

BILLING CODE 6560-50-M

AR301294

A

METHOD DETECTION LIMITS

601

Table 1. Chromatographic Conditions and Method Detection Limits

Parameter	Retention Time (min.) Column 1	Retention Time (min.) Column 2	Method Detection Limit µg/L
Chloromethane	1.50	5.28	0.08
Bromomethane	2.17	7.05	1.18
Dichlorodifluoromethane	2.62	nd	1.81
Vinyl chloride	2.67	5.28	0.18
Chloroethane	3.33	8.68	0.52
Methylene chloride	5.25	10.1	0.25
Trichlorofluoromethane	7.18	nd	nd
1,1-Dichloroethene	7.93	7.72	0.13
1,1-Dichloroethane	9.30	12.6	0.07
trans-1,2-Dichloroethene	10.1	9.38	0.10
Chloroform	10.7	12.1	0.05
1,2-Dichloroethane	11.4	15.4	0.03
1,1,1-Trichloroethane	12.6	13.1	0.03
Carbon tetrachloride	13.0	14.4	0.12
Bromodichloromethane	13.7	14.6	0.10
1,2-Dichloropropane	14.9	16.6	0.04
trans-1,3-Dichloropropene	15.2	16.6	0.34
Trichloroethene	15.8	13.1	0.12
Dibromochloromethane	16.5	16.6	0.09
1,1,2-Trichloroethane	16.5	18.1	0.02
cis-1,3-Dichloropropene	16.5	18.0	0.20
2-Chloroethylvinyl ether	18.0	nd	0.13
Bromoform	19.2	19.2	0.20
1,1,2,2-Tetrachloroethane	21.6	nd	0.03
Tetrachloroethene	21.7	15.0	0.03
Chlorobenzene	24.2	18.8	0.26
1,3-Dichlorobenzene	34.0	22.4	0.32
1,2-Dichlorobenzene	34.9	23.5	0.15
1,4-Dichlorobenzene	35.4	22.3	0.24

nd = not determined

Column 1 conditions: Carbopack B 60/80 mesh coated with 1% SP-1000 packed in an 8 ft × 0.1 in ID stainless steel or glass column with helium carrier gas at 40 mL/min flow rate. Column temperature held at 45°C for 3 min. then programmed at 8°C/min. to 220° and held for 15 min.

Column 2 conditions: Porasil-C 100/120 mesh coated with n-octane packed in a 6 ft × 0.1 in ID stainless steel or glass column with helium carrier gas at 40 mL/min flow rate. Column temperature held at 50°C for 3 min then programmed at 6°C/min to 170° and held for 4 min.

B

PRECISION DESIRED

601

TABLE 3.—METHOD ACCURACY AND PRECISION AS FUNCTIONS OF CONCENTRATION—METHOD 601

Parameter	Accuracy, as recovery, $\bar{X}'$ (µg/L)	Single analyst precision, s_r' (µg/L)	Overall precision, S' (µg/L)
Bromodichloromethane	1.12C−1.02	0.11$\bar{X}$+0.04	0.20$\bar{X}$+1.00
Bromoform	0.98C−2.05	0.12$\bar{X}$+0.58	0.21$\bar{X}$+2.41
Bromomethane	0.78C−1.27	0.28$\bar{X}$+0.27	0.36$\bar{X}$+0.84
Carbon tetrachloride	0.99C−1.04	0.15$\bar{X}$+0.36	0.20$\bar{X}$+0.39
Chlorobenzene	1.00C−1.23	0.15$\bar{X}$−0.02	0.18$\bar{X}$+1.21
Chloroethane	0.99C−1.53	0.14$\bar{X}$−0.13	0.17$\bar{X}$+0.83
2-Chloroethylvinyl ether*	1.00C	0.20$\bar{X}$	0.36$\bar{X}$
Chloroform	0.93C−0.39	0.13$\bar{X}$+0.15	0.18$\bar{X}$−0.02
Chloromethane	0.77C+0.16	0.28$\bar{X}$−0.31	0.52$\bar{X}$+1.31
Dibromochloromethane	0.94C+2.72	0.11$\bar{X}$+1.10	0.24$\bar{X}$+1.88
1,2-Dichlorobenzene	0.83C+1.70	0.20$\bar{X}$+0.97	0.13$\bar{X}$+6.13
1,3-Dichlorobenzene	0.95C+0.43	0.14$\bar{X}$+2.33	0.26$\bar{X}$+2.34
1,4-Dichlorobenzene	0.83C−0.09	0.15$\bar{X}$+0.29	0.20$\bar{X}$+0.41
1,1-Dichloroethane	0.95C−1.08	0.08$\bar{X}$+0.17	0.14$\bar{X}$+0.94
1,2-Dichloroethane	1.04C−1.08	0.11$\bar{X}$+0.70	0.15$\bar{X}$+0.94
1,1-Dichloroethene	0.88C−0.87	0.21$\bar{X}$−0.23	0.29$\bar{X}$−0.40
trans-1,2-Dichloroethene	0.87C−0.18	0.11$\bar{X}$+1.46	0.17$\bar{X}$+1.48
1,2-Dichloropropane*	1.00C	0.13$\bar{X}$	0.23$\bar{X}$
cis-1,3-Dichloropropene*	1.00C	0.18$\bar{X}$	0.32$\bar{X}$
trans-1,3 Dichloropropene*	1.00C	0.18$\bar{X}$	0.32$\bar{X}$
Methylene chloride	0.91C−0.89	0.11$\bar{X}$+0.33	0.21$\bar{X}$+1.43
1,1,2,2-Tetrachloroethane	0.96C+0.18	0.14$\bar{X}$+2.41	0.23$\bar{X}$+2.79
Tetrachloroethene	0.94C+0.08	0.14$\bar{X}$+0.38	0.18$\bar{X}$+2.21
1,1,1-Trichloroethane	0.90C−0.16	0.15$\bar{X}$+0.04	0.20$\bar{X}$+0.37
1,1,2-Trichloroethane	0.88C+0.30	0.13$\bar{X}$−0.14	0.19$\bar{X}$+0.87
Trichloroethene	0.87C+0.48	0.13$\bar{X}$−0.03	0.23$\bar{X}$+0.30
Trichlorofluoromethane	0.89C−0.07	0.15$\bar{X}$+0.67	0.26$\bar{X}$+0.91
Vinyl chloride	0.87C−0.36	0.13$\bar{X}$+0.65	0.27$\bar{X}$+0.40

$\bar{X}'$ = Expected recovery for one or more measurements of a sample containing a concentration of C, in µg/L.
s_r' = Expected single analyst standard deviation of measurements at an average concentration found of $\bar{X}$, in µg/L.
S' = Expected interlaboratory standard deviation of measurements at an average concentration found of $\bar{X}$, in µg/L.
C = True value for the concentration, in µg/L.
$\bar{X}$ = Average recovery found for measurements of samples containing a concentration of C, in µg/L.
* Estimates based upon the performance in a single laboratory.[10]

AR 301296

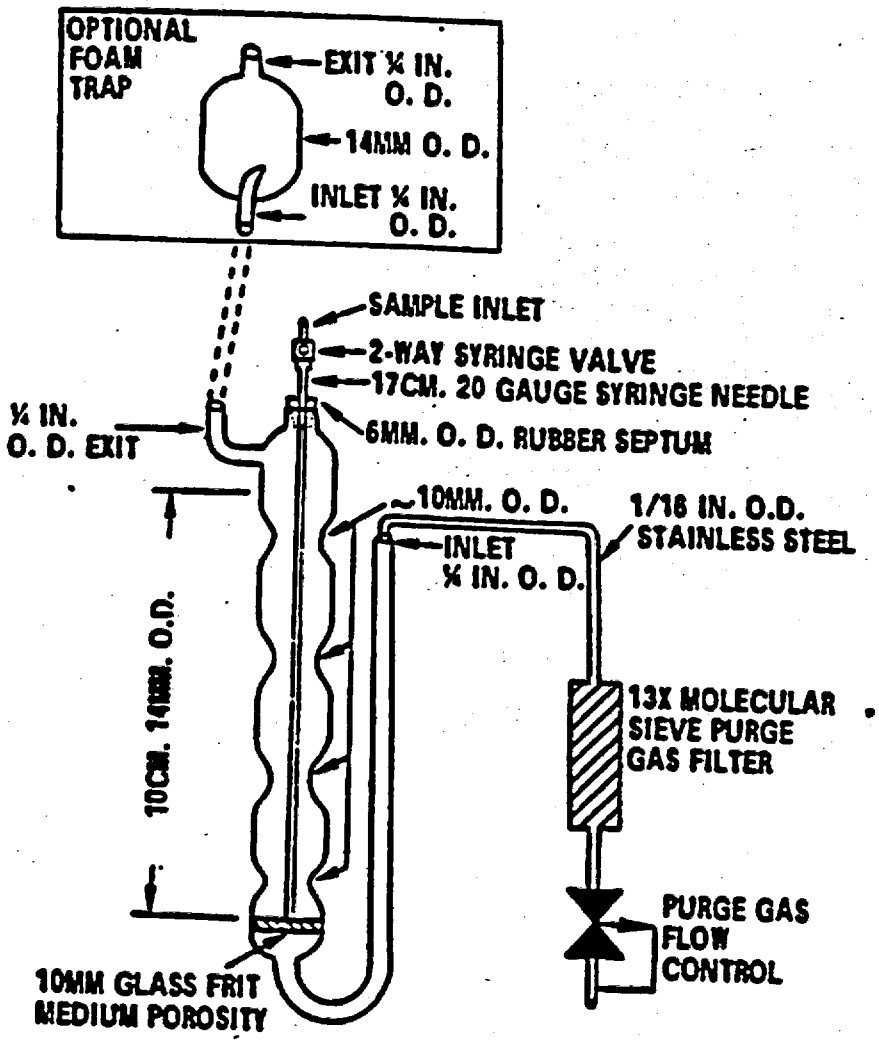

Figure 1. Purging device.

AR301297

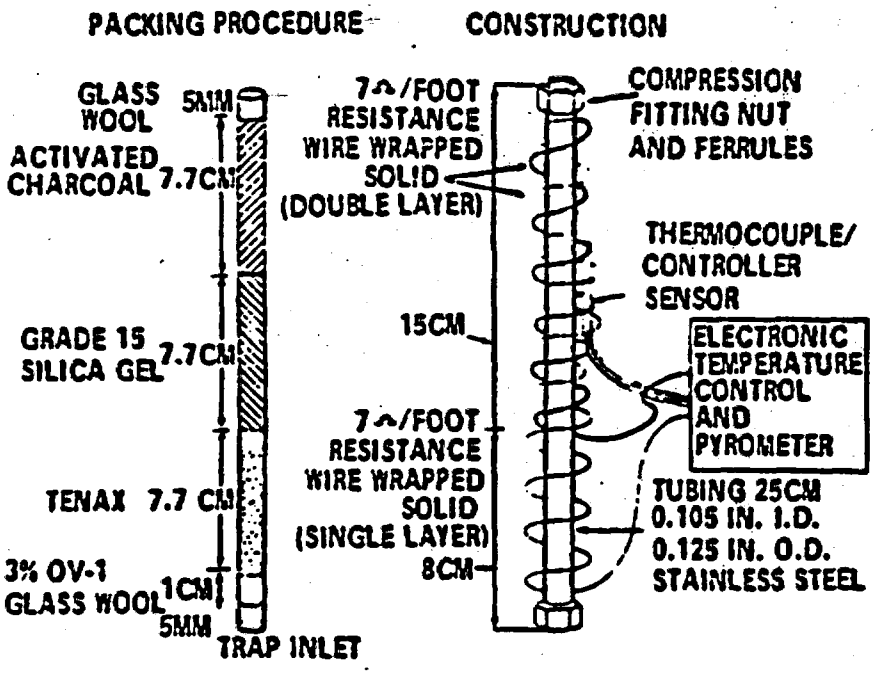

Figure 2. Trap packings and construction to include desorb capability

AR301298

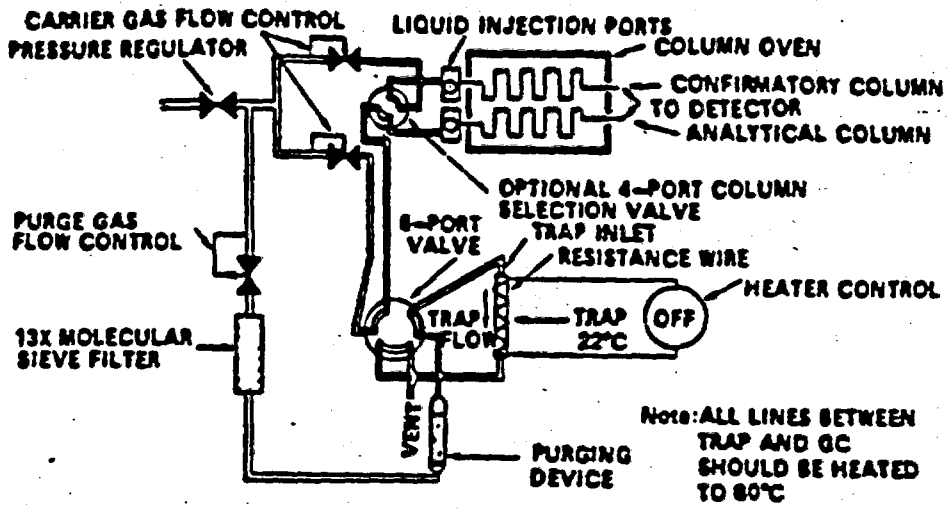

Figure 3. Purge and trap system-purge mode.

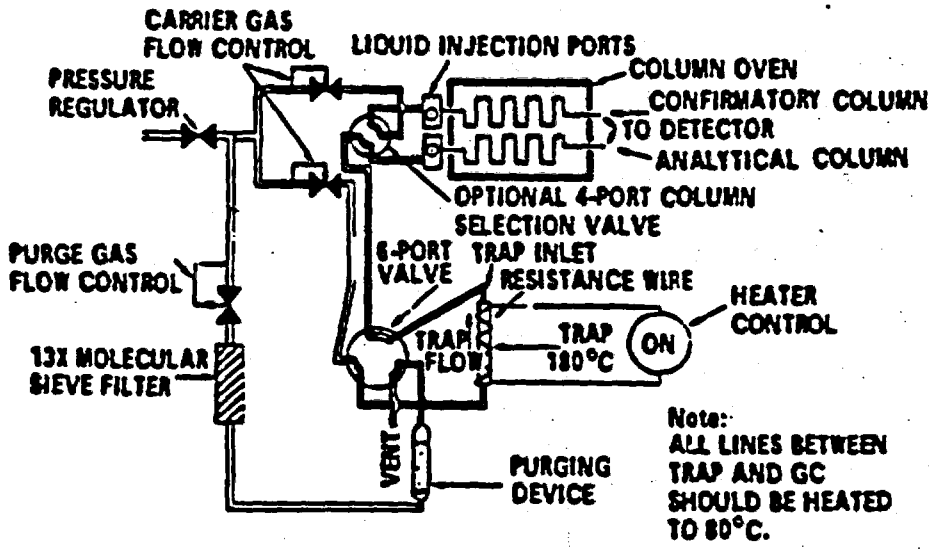

Figure 4. Purge and trap system - desorb mode.

AR301299

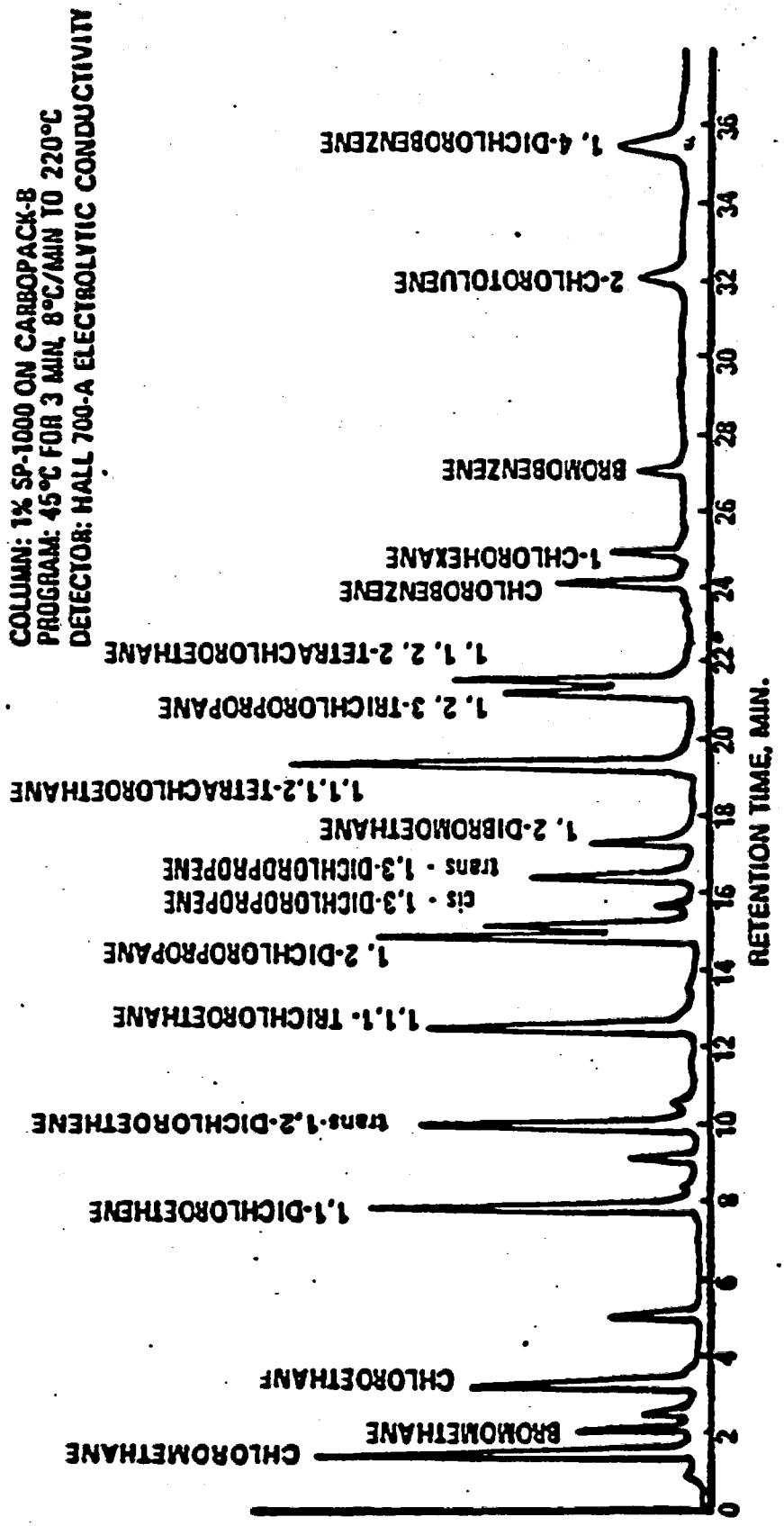

Figure 5. Gas chromatogram of purgeable halocarbons.

BILLING CODE 6560-50-C

AR301300

Method 602—Purgeable Aromatics

1. Scope and Application

1.1 This method covers the determination various purgeable aromatics. The following parameters may be determined by this method:

Parameter	STORET No.	CAS No.
Benzene	34030	71-43-2
Chlorobenzene	34301	108-90-7
1,2-Dichlorobenzene	34536	95-50-1
1,3-Dichlorobenzene	34566	541-73-1
1,4-Dichlorobenzene	34571	106-46-7
Ethylbenzene	34371	100-41-4
Toluene	34010	108-88-3

1.2 This is a purge and trap gas chromatographic (GC) method applicable to the determination of the compounds listed above in municipal and industrial discharges as provided under 40 CFR 136.1. When this method is used to analyze unfamiliar samples for any or all of the compounds above, compound identifications should be supported by at least one additional qualitative technique. This method describes analytical conditions for a second gas chromatographic column that can be used to confirm measurements made with the primary column. Method 624 provides gas chromatograph/mass spectrometer (GC/MS) conditions appropriate for the qualitative and quantitative confirmation of results for all of the parameters listed above.

1.3 The method detection limit (MDL, defined in Section 12.1)[1] for each parameter listed in Table 1. The MDL for a specific wastewater may differ from those listed, depending upon the nature of interferences in the sample matrix.

1.4 Any modification of this method, beyond those expressly permitted, shall be considered as a major modification subject to application and approval of alternate test procedures under 40 CFR 136.4 and 136.5.

1.5 This method is restricted to use by or under the supervision of analysts experienced in the operation of a purge and trap system and a gas chromatograph and in the interpretation of gas chromatograms. Each analyst must demonstrate the ability to generate acceptable results with this method using the procedure described in Section 8.2.

2. Summary of Method

2.1 An inert gas is bubbled through a 5-mL water sample contained in a specially-designed purging chamber at ambient temperature. The aromatics are efficiently transferred from the aqueous phase to the vapor phase. The vapor is swept through a sorbent trap where the aromatics are trapped. After purging is completed, the trap is heated and backflushed with the inert gas to desorb the aromatics onto a gas chromatographic column. The gas chromatograph is temperature programmed to separate the aromatics which are then detected with a photoionization detector.[2,3]

2.2 The method provides an optional gas chromatographic column that may be helpful in resolving the compounds of interest from interferences that may occur.

3. Interferences

3.1 Impurities in the purge gas and organic compounds outgassing from the plumbing ahead of the trap account for the majority of contamination problems. The analytical system must be demonstrated to be free from contamination under the conditions of the analysis by running laboratory reagent blanks as described in Section 8.1.3. The use of non-Teflon plastic tubing, non-Teflon thread sealants, or flow controllers with rubber components in the purge and trap system should be avoided.

3.2 Samples can be contaminated by diffusion of volatile organics through the septum seal into the sample during shipment and storage. A field reagent blank prepared from reagent water and carried through the sampling and handling protocol can serve as a check on such contamination.

3.3 Contamination by carry-over can occur whenever high level and low level samples are sequentially analyzed. To reduce carry-over, the purging device and sample syringe must be rinsed with reagent water between sample analyses. Whenever an unusually concentrated sample is encountered, it should be followed by an analysis of reagent water to check for cross contamination. For samples containing large amounts of water-soluble materials, suspended solids, high boiling compounds or high aromatic levels, it may be necessary to wash the purging device with a detergent solution, rinse it with distilled water, and then dry it in an oven at 105 °C between analyses. The trap and other parts of the system are also subject to contamination; therefore, frequent bakeout and purging of the entire system may be required.

4. Safety

4.1 The toxicity or carcinogenicity of each reagent used in this method has not been precisely defined; however, each chemical compound should be treated as a potential health hazard. From this viewpoint, exposure to these chemicals must be reduced to the lowest possible level by whatever means available. The laboratory is responsible for maintaining a current awareness file of OSHA regulations regarding the safe handling of the chemicals specified in this method. A reference file of material data handling sheets should also be made available to all personnel involved in the chemical analysis. Additional references to laboratory safety are available and have been identified[4-6] for the information of the analyst.

4.2 The following parameters covered by this method have been tentatively classified as known or suspected, human or mammalian carcinogens: benzene and 1,4-dichlorobenzene. Primary standards of these toxic compounds should be prepared in a hood. A NIOSH/MESA approved toxic gas respirator should be worn when the analyst handles high concentrations of these toxic compounds.

5. Apparatus and Materials

5.1 Sampling equipment, for discrete sampling.

5.1.1 Vial—25-mL capacity or larger, equipped with a screw cap with a hole in the center (Pierce #13075 or equivalent). Detergent wash, rinse with tap and distilled water, and dry at 105 °C before use.

5.1.2 Septum—Teflon-faced silicone (Pierce #12722 or equivalent). Detergent wash, rinse with tap and distilled water, and dry at 105 °C for 1 h before use.

5.2 Purge and trap system—The purge and trap system consists of three separate pieces of equipment: A purging device, trap, and desorber. Several complete systems are now commercially available.

5.2.1 The purging device must be designed to accept 5-mL samples with a water column at least 3 cm deep. The gaseous head space between the water column and the trap must have a total volume of less than 15 mL. The purge gas must pass through the water column as finely divided bubbles with a diameter of less than 3 mm at the origin. The purge gas must be introduced no more than 5 mm from the base of the water column. The purging device illustrated in Figure 1 meets these design criteria.

5.2.2 The trap must be at least 25 cm long and have an inside diameter of at least 0.105 in.

5.2.2.1 The trap is packed with 1 cm of methyl silicone coated packing (Section 6.4.2) and 23 cm of 2,6-diphenylene oxide polymer (Section 6.4.1) as shown in Figure 2. This trap was used to develop the method performance statements in Section 12.

5.2.2.2 Alternatively, either of the two traps described in Method 601 may be used, although water vapor will preclude the measurement of low concentrations of benzene.

5.2.3 The desorber must be capable of rapidly heating the trap to 180 °C. The polymer section of the trap should not be heated higher than 180 °C and the remaining sections should not exceed 200 °C. The desorber illustrated in Figure 2 meets these design criteria.

5.2.4 The purge and trap system may be assembled as a separate unit or be coupled to a gas chromatograph as illustrated in Figures 3, 4, and 5.

5.3 Gas chromatograph—An analytical system complete with a temperature programmable gas chromatograph suitable for on-column injection and all required accessories including syringes, analytical columns, gases, detector, and strip-chart recorder. A data system is recommended for measuring peak areas.

5.3.1 Column 1—6 ft long x 0.082 in. ID stainless steel or glass, packed with 5% SP-1200 and 1.75% Bentone-34 on Supelcoport (100/120 mesh) or equivalent. This column was used to develop the method performance statements in Section 12. Guidelines for the use of alternate column packings are provided in Section 10.1.

5.3.2 Column 2—6 ft long x 0.1 in ID stainless steel or glass, packed with 5% 1,2,3-Tris(2-cyanoethoxy)propane on Chromosorb W-AW (60/80 mesh) or equivalent.

5.3.3 Detector—Photoionization detector (h-Nu Systems, Inc. Model PI-101 or equivalent). This type of detector has been proven effective in the analysis of wastewaters for the parameters listed in the scope (Section 1.1), and was used to develop

AR301301

the method performance statements in Section 12. Guidelines for the use of alternate detectors are provided in Section 10.1.

5.4 Syringes—5-mL glass hypodermic with Luerlok tip (two each), if applicable to the purging device.

5.5 Micro syringes—25-µL, 0.006 in. ID needle.

5.6 Syringe valve—2-way, with Luer ends (three each).

5.7 Bottle—15-mL, screw-cap, with Teflon cap liner.

5.8 Balance—Analytical, capable of accurately weighing 0.0001 g.

6. Reagents

6.1 Reagent water—Reagent water is defined as a water in which an interferent is not observed at the MDL of the parameters of interest.

6.1.1 Reagent water can be generated by passing tap water through a carbon filter bed containing about 1 lb of activated carbon (Filtrasorb-300, Calgon Corp., or equivalent).

6.1.2 A water purification system (Millipore Super-Q or equivalent) may be used to generate reagent water.

6.1.3 Reagent water may also be prepared by boiling water for 15 min. Subsequently, while maintaining the temperature at 90 °C, bubble a contaminant-free inert gas through the water for 1 h. While still hot, transfer the water to a narrow mouth screw-cap bottle and seal with a Teflon-lined septum and cap.

6.2 Sodium thiosulfate—(ACS) Granular.

6.3 Hydrochloric acid (1+1)—Add 50 mL of concentrated HCl (ACS) to 50 mL of reagent water.

6.4 Trap Materials:

6.4.1 2,6-Diphenylene oxide polymer—Tenax, (60/80 mesh), chromatographic grade or equivalent.

6.4.2 Methyl silicone packing—3% OV-1 on Chromosorb-W (60/80 mesh) or equivalent.

6.5 Methanol—Pesticide quality or equivalent.

6.6 Stock standard solutions—Stock standard solutions may be prepared from pure standard materials or purchased as certified solutions. Prepare stock standard solutions in methanol using assayed liquids. Because of the toxicity of benzene and 1,4-dichlorobenzene, primary dilutions of these materials should be prepared in a hood. A NIOSH/MESA approved toxic gas respirator should be used when the analyst handles high concentrations of such materials.

6.6.1 Place about 9.8 mL of methanol into a 10-mL ground glass stoppered volumetric flask. Allow the flask to stand, unstoppered, for about 10 min or until all alcohol wetted surfaces have dried. Weigh the flask to the nearest 0.1 mg.

6.6.2 Using a 100-µL syringe, immediately add two or more drops of assayed reference material to the flask, then reweigh. Be sure that the drops fall directly into the alcohol without contacting the neck of the flask.

6.6.3 Reweigh, dilute to volume, stopper, then mix by inverting the flask several times. Calculate the concentration in µg/µL from the net gain in weight. When compound purity is assayed to be 96% or greater, the weight can be used without correction to calculate the concentration of the stock standard. Commercially prepared stock standards can be used at any concentration if they are certified by the manufacturer or by an independent source.

6.6.4 Transfer the stock standard solution into a Teflon-sealed screw-cap bottle. Store at 4 °C and protect from light.

6.6.5 All standards must be replaced after one month, or sooner if comparison with check standards indicates a problem.

6.7 Secondary dilution standards—Using stock standard solutions, prepare secondary dilution standards in methanol that contain the compounds of interest, either singly or mixed together. The secondary dilution standards should be prepared at concentrations such that the aqueous calibration standards prepared in Sections 7.3.1 or 7.4.1 will bracket the working range of the analytical system. Secondary solution standards must be stored with zero headspace and should be checked frequently for signs of degradation or evaporation, especially just prior to preparing calibration standards from them.

6.8 Quality control check sample concentrate—See Section 8.2.1.

7. Calibration

7.1 Assemble a purge and trap system that meets the specifications in Section 5.2. Condition the trap overnight at 180 °C by backflushing with an inert gas flow of at least 20 mL/min. Condition the trap for 10 min once daily prior to use.

7.2 Connect the purge and trap system to a gas chromatograph. The gas chromatograph must be operated using temperature and flow rate conditions equivalent to those given in Table 1. Calibrate the purge and trap-gas chromatographic system using either the external standard technique (Section 7.3) or the internal standard technique (Section 7.4).

7.3 External standard calibration procedure:

7.3.1 Prepare calibration standards at a minimum of three concentration levels for each parameter by carefully adding 20.0 µL of one or more secondary dilution standards to 100, 500, or 1000 mL of reagent water. A 25-µL syringe with a 0.006 in. ID needle should be used for this operation. One of the external standards should be at a concentration near, but above, the MDL (Table 1) and the other concentrations should correspond to the expected range of concentrations found in real samples or should define the working range of the detector. These aqueous standards must be prepared fresh daily.

7.3.2 Analyze each calibration standard according to Section 10, and tabulate peak height or area responses versus the concentration in the standard. The results can be used to prepare a calibration curve for each compound. Alternatively, if the ratio of response to concentration (calibration factor) is a constant over the working range (<10% relative standard deviation, RSD), linearity through the origin can be assumed and the average ratio or calibration factor can be used in place of a calibration curve.

7.4 Internal standard calibration procedure—To use this approach, the analyst must select one or more internal standards that are similar in analytical behavior to the compounds of interest. The analyst must further demonstrate that the measurement of the internal standard is not affected by method or matrix interferences. Because of these limitations, no internal standard can be suggested that is applicable to all samples. The compound, α,α,α,-trifluorotoluene, recommended as a surrogate spiking compound in Section 8.7 has been used successfully as an internal standard.

7.4.1 Prepare calibration standards at a minimum of three concentration levels for each parameter of interest as described in Section 7.3.1.

7.4.2 Prepare a spiking solution containing each of the internal standards using the procedures described in Section 6.6 and 6.7. It is recommended that the secondary dilution standard be prepared at a concentration of 15 µg/mL of each internal standard compound. The addition of 10 µl of this standard to 3.0 mL of sample or calibration standard would be equivalent to 30 µg/L.

7.4.3 Analyze each calibration standard according to Section 10, adding 10 µL of internal standard spiking solution directly to the syringe (Section 10.4). Tabulate peak height or area responses against concentration for each compound and internal standard, and calculate response factors (RF) for each compound using Equation 1.

Equation 1.

$$RF = \frac{(A_s)(C_{is})}{(A_{is})(C_s)}$$

where:

A_s = Response for the parameter to be measured.

A_{is} = Response for the internal standard.

C_{is} = Concentration of the internal standard

C_s = Concentration of the parameter to be measured.

If the RF value over the working range is a constant (<10% RSD), the RF can be assumed to be invariant and the average RF can be used for calculations. Alternatively, the results can be used to plot a calibration curve of response ratios, A_s/A_{is} vs. RF.

7.5 The working calibration curve, calibration factor, or RF must be verified on each working day by the measurement of a QC check sample.

7.5.1 Prepare the QC check sample as described in Section 8.2.2.

7.5.2 Analyze the QC check sample according to Section 10.

7.5.3 For each parameter, compare the response (Q) with the corresponding calibration acceptance criteria found in Table 2. If the responses for all parameters of interest fall within the designated ranges, analysis of actual samples can begin. If any individual Q falls outside the range, a new calibration curve, calibration factor, or RF must be prepared for that parameter according to Section 7.3 or 7.4.

AR301302

8. Quality Control

8.1 Each laboratory that uses this method is required to operate a formal quality control program. The minimum requirements of this program consist of an initial demonstration of

laboratory capability and an ongoing analysis of spiked samples to evaluate and document data quality. The laboratory must maintain records to document the quality of data that is generated. Ongoing data quality checks are compared with established performance criteria to determine if the results of analyses meet the performance characteristics of the method. When results of sample spikes indicate atypical method performance, a quality control check standard must be analyzed to confirm that the measurements were performed in an in-control mode of operation.

8.1.1 The analyst must make an initial, one-time, demonstration of the ability to generate acceptable accuracy and precision with this method. This ability is established as described in Section 8.2.

8.1.2 In recognition of advances that are occurring in chromatography, the analyst is permitted certain options (detailed in Section 10.1) to improve the separations or lower the cost of measurements. Each time such a modification is made to the method, the analyst is required to repeat the procedure in Section 8.2.

8.1.3 Each day, the analyst must analyze a reagent water blank to demonstrate that interferences from the analytical system are under control.

8.1.4 The laboratory must, on an ongoing basis, spike and analyze a minimum of 10% of all samples to monitor and evaluate laboratory data quality. This procedure is described in Section 8.3.

8.1.5 The laboratory must, on an ongoing basis, demonstrate through the analyses of quality control check standards that the operation of the measurement system is in control. This procedure is described in Section 8.4. The frequency of the check standard analyses is equivalent to 10% of all samples analyzed but may be reduced if spike recoveries from samples (Section 8.3) meet all specified quality control criteria.

8.1.6 The laboratory must maintain performance records to document the quality of data that is generated. This procedure is described in Section 8.5.

8.2 To establish the ability to generate acceptable accuracy and precision, the analyst must perform the following operations.

8.2.1 A quality control (QC) check sample concentrate is required containing each parameter of interest at a concentration of 10 µg/mL in methanol. The QC check sample concentrate must be obtained from the U.S. Environmental Protection Agency, Environmental Monitoring and Support Laboratory in Cincinnati, Ohio, if available. If not available from that source, the QC check sample concentrate must be obtained from another external source. If not available from either source above, the QC check sample concentrate must be prepared by the laboratory using stock standards prepared independently from those used for calibration.

8.2.2 Prepare a QC check sample to contain 20 µg/L of each parameter by adding 200 µL of QC check sample concentrate to 100 mL of reagent water.

8.2.3 Analyze four 5-mL aliquots of the well-mixed QC check sample according to Section 10.

8.2.4 Calculate the average recovery ($\bar{X}$) in µg/L, and the standard deviation of the recovery (s) in µg/L, for each parameter of interest using the four results.

8.2.5 For each parameter compare s and $\bar{X}$ with the corresponding acceptance criteria for precision and accuracy, respectively, found in Table 2. If s and $\bar{X}$ for all parameters of interest meet the acceptance criteria, the system performance is acceptable and analysis of actual samples can begin. If any individual s exceeds the precision limit or any individual $\bar{X}$ falls outside the range for accuracy, the system performance is unacceptable for that parameter.

Note.—The large number of parameters in Table 2 present a substantial probability that one or more will fail at least one of the acceptance criteria when all parameters are analyzed.

8.2.6 When one or more of the parameters tested fail at least one of the acceptance criteria, the analyst must proceed according to Section 8.2.6.1 or 8.2.6.2.

8.2.6.1 Locate and correct the source of the problem and repeat the test for all parameters of interest beginning with Section 8.2.3.

8.2.6.2 Beginning with Section 8.2.3, repeat the test only for those parameters that failed to meet criteria. Repeated failure, however, will confirm a general problem with the measurement system. If this occurs, locate and correct the source of the problem and repeat the test for all compounds of interest beginning with Section 8.2.3.

8.3 The laboratory must, on an ongoing basis, spike at least 10% of the samples from each sample site being monitored to assess accuracy. For laboratories analyzing one to ten samples per month, at least one spiked sample per month is required.

8.3.1 The concentration of the spike in the sample should be determined as follows:

8.3.1.1 If, as in compliance monitoring, the concentration of a specific parameter in the sample is being checked against a regulatory concentration limit, the spike should be at that limit or 1 to 5 times higher than the background concentration determined in Section 8.3.2, whichever concentration would be larger.

8.3.1.2 If the concentration of a specific parameter in the sample is not being checked against a limit specific to that parameter, the spike should be at 20 µg/L or 1 to 5 times higher than the background concentration determined in Section 8.3.2, whichever concentration would be larger.

8.3.2 Analyze one 5-mL sample aliquot to determine the background concentration (B) of each parameter. If necessary, prepare a new QC check sample concentrate (Section 8.2.1) appropriate for the background concentrations in the sample. Spike a second 5-mL sample aliquot with 10 µL of the QC check sample concentrate and analyze it to determine the concentration after spiking (A) of each parameter. Calculate each percent recovery (P) as 100(A-B)%/T, where T is the known true value of the spike.

8.3.3 Compare the percent recovery (P) for each parameter with the corresponding QC acceptance criteria found in Table 2. These acceptance criteria were calculated to include an allowance for error in measurement of both the background and spike concentrations, assuming a spike to background ratio of 5:1. This error will be accounted for to the extent that the analyst's spike to background ratio approaches 5:1.[7] If spiking was performed at a concentration lower than 20 µg/L, the analyst must use either the QC acceptance criteria in Table 2, or optional QC acceptance criteria calculated for the specific spike concentration. To calculate optional acceptance criteria for the recovery of a parameter: (1) Calculate accuracy (X') using the equation in Table 3, substituting the spike concentration (T) for C; (2) calculate overall precision (S') using the equation in Table 3, substituting X' for $\bar{X}$; (3) calculate the range for recovery at the spike concentration as (100 X'/T) ± 2.44(100 S'/T)%.[7]

8.3.4 If any individual P falls outside the designated range for recovery, that parameter has failed the acceptance criteria. A check standard containing each parameter that failed the criteria must be analyzed as described in Section 8.4.

8.4 If any parameter fails the acceptance criteria for recovery in Section 8.3, a QC check standard containing each parameter that failed must be prepared and analyzed.

Note: The frequency for the required analysis of a QC check standard will depend upon the number of parameters being simultaneously tested, the complexity of the sample matrix, and the performance of the laboratory.

8.4.1 Prepare the QC check standard by adding 10 µL of QC check sample concentrate (Sections 8.2.1 or 8.3.2) to 5 mL of reagent water. The QC check standard needs only to contain the parameters that failed criteria in the test in Section 8.3.

8.4.2 Analyze the QC check standard to determine the concentration measured (A) of each parameter. Calculate each percent recovery (P_s) as 100 (A/T)%, where T is the true value of the standard concentration.

8.4.3 Compare the percent recovery (P_s) for each parameter with the corresponding QC acceptance criteria found in Table 2. Only parameters that failed the test in Section 8.3 need to be compared with these criteria. If the recovery of any such parameter falls outside the designated range, the laboratory performance for that parameter is judged to be out of control, and the problem must be immediately identified and corrected. The analytical result for that parameter in the unspiked sample is suspect and may not be reported for regulatory compliance purposes.

8.5 As part of the QC program for the laboratory, method accuracy for wastewater samples must be assessed and records must be maintained. After the analysis of five spiked wastewater samples as in Section 8.3, calculate the average percent recovery ($\bar{P}$) and the standard deviation of the percent recovery (s_p). Express the accuracy assessment as a percent recovery interval from $\bar{P} - 2s_p$ to $\bar{P} + 2s_p$. If $\bar{P}$ = 90% and s_p = 10%, for example, the accuracy interval is expressed as 70–110%. Update the accuracy assessment for each parameter on a regular basis (e.g. after each five to ten new accuracy measurements).

AR 301303

8.5 It is recommended that the laboratory adopt additional quality assurance practices for use with this method. The specific practices that are most productive depend upon the needs of the laboratory and the nature of the samples. Field duplicates may be analyzed to assess the precision of the environmental measurements. When doubt exists over the identification of a peak on the chromatogram, confirmatory techniques such as gas chromatography with a dissimilar column, specific element detector, or mass spectrometer must be used. Whenever possible, the laboratory should analyze standard reference materials and participate in relevant performance evaluation studies.

8.7 The analyst should monitor both the performance of the analytical system and the effectiveness of the method in dealing with each sample matrix by spiking each sample, standard, and reagent water blank with surrogate compounds (e.g. α, α, α,-trifluorotoluene) recommended to encompass the range of the temperature program used in this method. From stock standard solutions prepared as in Section 8.6, add a volume to give 750 μg of each surrogate to 45 mL of reagent water contained in a 50-mL volumetric flask, mix and dilute to volume for a concentration of 15 mg/μL. Add 10 μL of this surrogate spiking solution directly into the 5-mL syringe with every sample and reference standard analyzed. Prepare a fresh surrogate spiking solution on a weekly basis. If the internal standard calibration procedure is being used, the surrogate compounds may be added directly to the internal standard spiking solution (Section 7.4.2).

9. Sample Collection, Preservation, and Handling

9.1 The samples must be iced or refrigerated from the time of collection until analysis. If the sample contains free or combined chlorine, add sodium thiosulfate preservative (10 mg/40 mL is sufficient for up to 5 ppm Cl_2) to the empty sample bottle just prior to shipping to the sampling site. EPA Method 330.4 or 330.5 may be used for measurement of residual chlorine.[8] Field test kits are available for this purpose.

9.2 Collect about 500 mL of sample in a clean container. Adjust the pH of the sample to about 2 by adding 1+1 HCl while stirring. Fill the sample bottle in such a manner that no air bubbles pass through the sample as the bottle is being filled. Seal the bottle so that no air bubbles are entrapped in it. Maintain the hermetic seal on the sample bottle until time of analysis.

9.3 All samples must be analyzed within 14 days of collection.[8]

10. Procedure

10.1 Table 1 summarizes the recommended operating conditions for the gas chromatograph. Included in this table are estimated retention times and MDL that can be achieved under these conditions. An example of the separations achieved by Column 1 is shown in Figure 8. Other packed columns, chromatographic conditions, or detectors may be used if the requirements of Section 8.2 are met.

10.2 Calibrate the system daily as described in Section 7.

10.3 Adjust the purge gas (nitrogen or helium) flow rate to 40 mL/min. Attach the trap inlet to the purging device, and set the purge and trap system to purge (Figure 3). Open the syringe valve located on the purging device sample introduction needle.

10.4 Allow the sample to come to ambient temperature prior to introducing it to the syringe. Remove the plunger from a 5-mL syringe and attach a closed syringe valve. Open the sample bottle (or standard) and carefully pour the sample into the syringe barrel to just short of overflowing. Replace the syringe plunger and compress the sample. Open the syringe valve and vent any residual air while adjusting the sample volume to 5.0 mL. Since this process of taking an aliquot destroys the validity of the sample for future analysis, the analyst should fill a second syringe at this time to protect against possible loss of data. Add 10.0 μL of the surrogate spiking solution (Section 8.7) and 10.0 μL of the internal standard spiking solution (Section 7.4.2), if applicable, through the valve bore, then close the valve.

10.5 Attach the syringe-syringe valve assembly to the syringe valve on the purging device. Open the syringe valves and inject the sample into the purging chamber.

10.6 Close both valves and purge the sample for 12.0±0.1 min at ambient temperature.

10.7 After the 12-min purge time, disconnect the purging device from the trap. Dry the trap by maintaining a flow of 40 mL/min of dry purge gas through it for 6 min (Figure 4). If the purging device has no provision for bypassing the purger for this step, a dry purger should be inserted into the device to minimize moisture in the gas. Attach the trap to the chromatograph, adjust the purge and trap system to the desorb mode (Figure 5), and begin to temperature program the gas chromatograph. Introduce the trapped materials to the GC column by rapidly heating the trap to 180 °C while backflushing the trap with an inert gas between 20 and 60 mL/min for 4 min. If rapid heating of the trap cannot be achieved, the GC column must be used as a secondary trap by cooling it to 30 °C (subambient temperature, if poor peak geometry and random retention time problems persist) instead of the initial program temperature of 50 °C.

10.8 While the trap is being desorbed into the gas chromatograph column, empty the purging chamber using the sample introduction syringe. Wash the chamber with two 5-mL flushes of reagent water.

10.9 After desorbing the sample for 4 min, recondition the trap by returning the purge and trap system to the purge mode. Wait 15 s, then close the syringe valve on the purging device to begin gas flow through the trap. The trap temperature should be maintained at 180 °C. After approximately 7 min, turn off the trap heater and open the syringe valve to stop the gas flow through the trap. When the trap is cool, the next sample can be analyzed.

10.10 Identify the parameters in the sample by comparing the retention times of the peaks in the sample chromatogram with those of the peaks in standard chromatograms. The width of the retention time window used to make identifications should be based upon measurements of actual retention time variations of standards over the course of a day. Three times the standard deviation of a retention time for a compound can be used to calculate a suggested window size; however, the experience of the analyst should weigh heavily in the interpretation of chromatograms.

10.11 If the response for a peak exceeds the working range of the system, prepare a dilution of the sample with reagent water from the aliquot in the second syringe and reanalyze.

11. Calculations

11.1 Determine the concentration of individual compounds in the sample.

11.1.1 If the external standard calibration procedure is used, calculate the concentration of the parameter being measured from the peak response using the calibration curve or calibration factor determined in Section 7.3.2.

11.1.2 If the internal standard calibration procedure is used, calculate the concentration in the sample using the response factor (RF) determined in Section 7.4.3 and Equation 2.

Equation 2.

$$\text{Concentration } (\mu g/L) = \frac{(A_x)(C_{is})}{(A_{is})(RF)}$$

where:

A_x = Response for the parameter to be measured.

A_{is} = Response for the internal standard.

C_{is} = Concentration of the internal standard.

11.2 Report results in μg/L without correction for recovery data. All QC data obtained should be reported with the sample results.

12. Method Performance

12.1 The method detection limit (MDL) is defined as the minimum concentration of a substance that can be measured and reported with 99% confidence that the value is above zero.[1] The MDL concentrations listed in Table 1 were obtained using reagent water.[9] Similar results were achieved using representative wastewaters. The MDL actually achieved in a given analysis will vary depending on instrument sensitivity and matrix effects.

12.2 This method has been demonstrated to be applicable for the concentration range from the MDL to 1000 X MDL.[9] Direct aqueous injection techniques should be used to measure concentration levels above 1000 x MDL.

12.3 This method was tested by 20 laboratories using reagent water, drinking water, surface water, and three industrial wastewaters spiked at six concentrations over the range 2.1 to 540 μg/L. Single operator precision, overall precision, and method accuracy were found to be directly related to the concentration of the parameter and essentially independent of the sample

AR 301304

matrix. Linear equations to describe these relationships are presented in Table 3.

References

1. 40 CFR Part 136, Appendix B.
2. Bellar, T.A., and Lichtenberg, J.J. *Journal American Water Works Association*, 66, 739 (1974).
3. Bellar, T.A., and Lichtenberg, J.J. "Semi-Automated Headspace Analysis of Drinking Waters and Industrial Waters for Purgeable Volatile Organic Compounds." Proceedings of Symposium on Measurement of Organic Pollutants in Water and Wastewater. American Society for Testing and Materials, STP 686, C.E. Van Hall, editor, 1978.
4. "Carcinogens—Working with Carcinogens." Department of Health, Education, and Welfare, Public Health Service, Center for Disease Control, National Institute for Occupational Safety and Health, Publication No. 77-206, August 1977.
5. "OSHA Safety and Health Standards, General Industry," (29 CFR 1910), Occupational Safety and Health Administration, OSHA 2206 (Revised, January 1976).
6. "Safety in Academic Chemistry Laboratories," American Chemical Society Publication, Committee on Safety, 3rd Edition, 1979.
7. Provost, L.P., and Elder, R.S. "Interpretation of Percent Recovery Data." *American Laboratory*, 15, 58-63 (1983). (The value 2.44 used in the equation in Section 8.3.3. is t wo times the value 1.22 derived in this report.)
8. "Methods 330.4 (Titrimetric, DPD-FAS) and 330.5 (Spectrophotometric, DPD) for Chlorine, Total Residual." Methods for Chemical Analysis of Water and Wastes, EPA-600/4-79-020, U.S. Environmental Protection Agency, Office of Research and Development, Environmental Monitoring and Support Laboratory, Cincinnati, Ohio 45268, March 1979.
9. "EPA Method Validation Study 24, Method 602 (Purgeable Aromatics)." Report for EPA Contract 68-03-2856 (In preparation).

TABLE 1.—CHROMATOGRAPHIC CONDITIONS AND METHOD DETECTION LIMITS

Parameter	Retention time (min)		Method detection limit (µg/L)
	Column 1	Column 2	
Benzene	3.33	2.75	0.2
Toluene	5.75	4.25	0.2
Ethylbenzene	8.25	6.25	0.2
Chlorobenzene	8.17	8.02	0.2
1,4-Dichlorobenzene	16.8	16.2	0.3
1,3-Dichlorobenzene	16.2	15.0	0.4
1,2-Dichlorobenzene	25.8	19.4	0.4

Column 1 conditions: Supelcoport (100/120 mesh) coated with 5% SP-1200/1.75% Bentone-34 packed in a 6 ft x 0.085 in. ID stainless steel column with helium carrier gas at 30 mL/min flow rate. Column temperature held at 50 °C for 2 min then programmed at 6 °C/min to 90 °C for a final hold.

Column 2 conditions: Chromosorb W-AW (60/80 mesh) coated with 5% 1,2,3-Tris(2-cyanoethoxy)propane packed in a 6 ft x 0.085 in. ID stainless steel column with helium carrier gas at 30 mL/min flow rate. Column temperature held at 40 °C for 2 min then programmed at 2 °C/min to 100 °C for a final hold.

TABLE 2.—CALIBRATION AND QC ACCEPTANCE CRITERIA—METHOD 602 *

Parameter	Range for Q (µg/L)	Limit for s (µg/L)	Range for $\bar{X}$ (µg/L)	Range for P_s, P_o (%)
Benzene	15.4-24.6	4.1	10.0-27.9	39-150
Chlorobenzene	16.1-23.9	3.8	12.7-25.4	56-136
1,2-Dichlorobenzene	13.6-26.4	6.8	10.6-27.6	27-164
1,3-Dichlorobenzene	14.5-25.5	6.0	12.6-25.5	60-141
1,4-Dichlorobenzene	13.9-26.1	5.5	11.6-25.5	42-143
Ethylbenzene	12.6-27.4	6.7	10.0-26.2	32-160
Toluene	15.5-24.5	4.0	11.3-27.7	46-148

Q = Concentration measured in QC check sample, in µg/L (Section 7.6.3).
s = Standard deviation of four recovery measurements, in µg/L (Section 8.2.4).
$\bar{X}$ = Average recovery for four recovery measurements, in µg/L (Section 8.2.4).
P_s, P_o = Percent recovery measured (Section 8.3.2, Section 8.4.2).
* Criteria were calculated assuming a QC check sample concentration of 20 µg/L.

Note: These criteria are based directly upon the method performance data in Table 3. Where necessary, the limits for recovery have been broadened to assure applicability of the limits to concentrations below those used to develop Table 3.

TABLE 3.—METHOD ACCURACY AND PRECISION AS FUNCTIONS OF CONCENTRATION—METHOD 602

Parameter	Accuracy, as recovery, X' (µg/L)	Single analyst precision, s' (µg/L)	Overall precision, S' (µg/L)
Benzene	0.92C+0.57	0.08$\bar{X}$+0.58	0.21$\bar{X}$+0.56
Chlorobenzene	0.96C+0.02	0.08$\bar{X}$+0.23	0.17$\bar{X}$+0.10
1,2-Dichlorobenzene	0.93C+0.52	0.17$\bar{X}$−0.04	0.22$\bar{X}$+0.53
1,3-Dichlorobenzene	0.90C−0.04	0.15$\bar{X}$−0.10	0.19$\bar{X}$+0.08
1,4-Dichlorobenzene	0.93C+0.08	0.18$\bar{X}$+0.29	0.20$\bar{X}$+0.41
Ethylbenzene	0.94C+0.31	0.17$\bar{X}$+0.46	0.26$\bar{X}$+0.23
Toluene	0.94C+0.66	0.08$\bar{X}$+0.48	0.18$\bar{X}$+0.71

X' = Expected recovery for one or more measurements of a sample containing a concentration of C, in µg/L.
s' = Expected single analyst standard deviation of measurements at an average concentration found of $\bar{X}$, in µg/L.
S' = Expected interlaboratory standard deviation of measurements at an average concentration found of $\bar{X}$, in µg/L.
C = True value for the Concentration, in µg/L.
$\bar{X}$ = Average recovery found for measurements of samples containing a concentration of C, in µg/L.

BILLING CODE 6560-50-M

AR301305

A

METHOD DETECTION LIMITS

602

Table 1. Chromatographic Conditions and Method Detection Limits

Parameter	Retention Time (min.) Column 1	Retention Time (min.) Column 2	Method Detection Limit µg/L
Benzene	3.33	2.75	0.2
Toluene	5.75	4.25	0.2
Ethylbenzene	8.25	6.25	0.2
Chlorobenzene	9.17	8.02	0.2
1,4-Dichlorobenzene	16.8	16.2	0.3
1,3-Dichlorobenzene	18.2	15.0	0.4
1,2-Dichlorobenzene	25.9	19.4	0.4

Column 1 conditions: Supelcoport 100/120 mesh coated with 5% SP-1200 and 1.75% Bentone-34 packed in a 6 ft. × 0.085 in ID stainless steel column with helium carrier gas at 36 cc/min flow rate. Column temperature held at 50°C for 2 min. then programmed at 6°C/min to 90°C for a final hold.

Column 2 conditions: Chromosorb W-AW 60/80 mesh coated with 5% 1,2,3-Tris(2-cyanoethyoxy)propane packed in a 6 ft. × 0.085 in ID stainless steel column with helium carrier gas at 30 cc/min flow rate. Column temperature held at 40°C for 2 min then programmed at 2°C/min to 100°C for a final hold.

B

PRECISION DESIRED

602

TABLE 3.—METHOD ACCURACY AND PRECISION AS FUNCTIONS OF CONCENTRATION—METHOD 602

Parameter	Accuracy, as recovery, X' (µg/L)	Single analyst precision, s' (µg/L)	Overall precision, S' (µg/L)
Benzene	0.92C+0.57	0.08$\bar{X}$+0.59	0.21$\bar{X}$+0.98
Chlorobenzene	0.95C+0.02	0.09$\bar{X}$+0.23	0.17$\bar{X}$+0.10
1,2-Dichlorobenzene	0.93C+0.52	0.17$\bar{X}$−0.04	0.22$\bar{X}$+0.63
1,3-Dichlorobenzene	0.96C−0.04	0.15$\bar{X}$−0.10	0.19$\bar{X}$+0.09
1,4-Dichlorobenzene	0.93C+0.09	0.15$\bar{X}$+0.29	0.20$\bar{X}$+0.41
Ethylbenzene	0.94C+0.31	0.17$\bar{X}$+0.46	0.26$\bar{X}$+0.23
Toluene	0.94C+0.66	0.09$\bar{X}$+0.49	0.18$\bar{X}$+0.71

X'=Expected recovery for one or more measurements of a sample containing a concentration of C, in µg/L.
s'=Expected single analyst standard deviation of measurements at an average concentration found of $\bar{X}$, in µg/L.
S'=Expected interlaboratory standard deviation of measurements at an average concentration found of $\bar{X}$, in µg/L.
C=True value for the Concentration, in µg/L.
$\bar{X}$=Average recovery found for measurements of samples containing a concentration of C, in µg/L.

AR301307

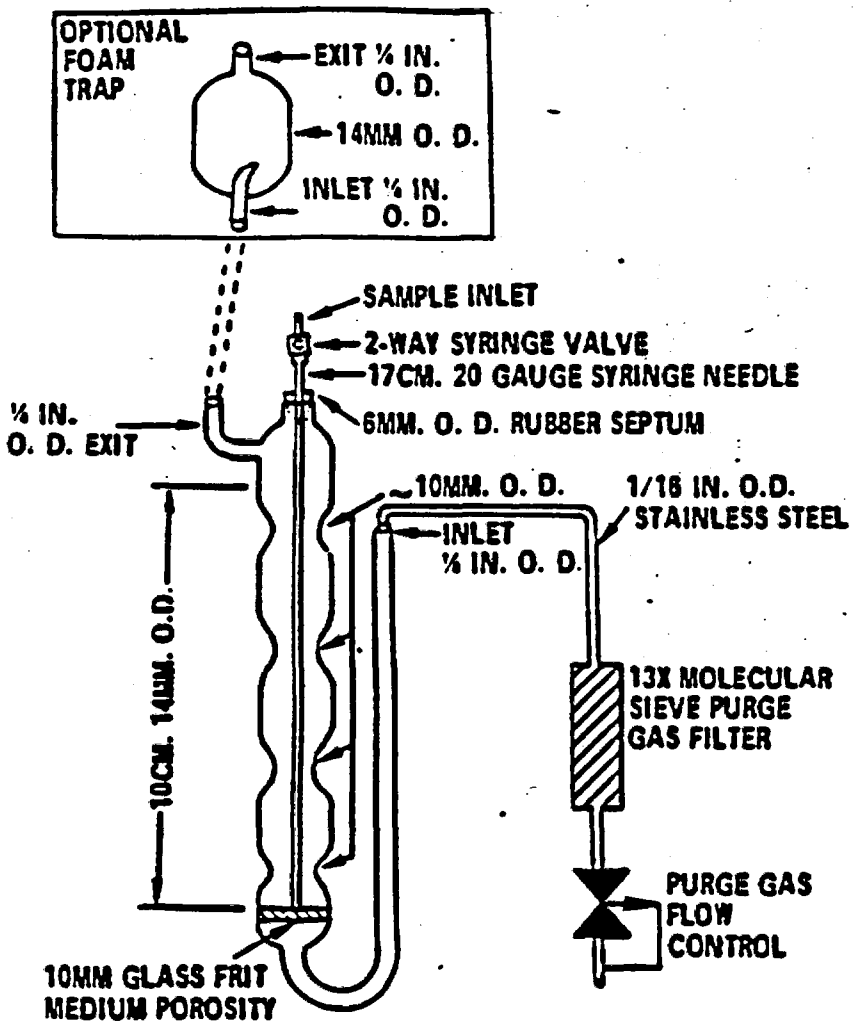

Figure 1. Purging device.

AR301308

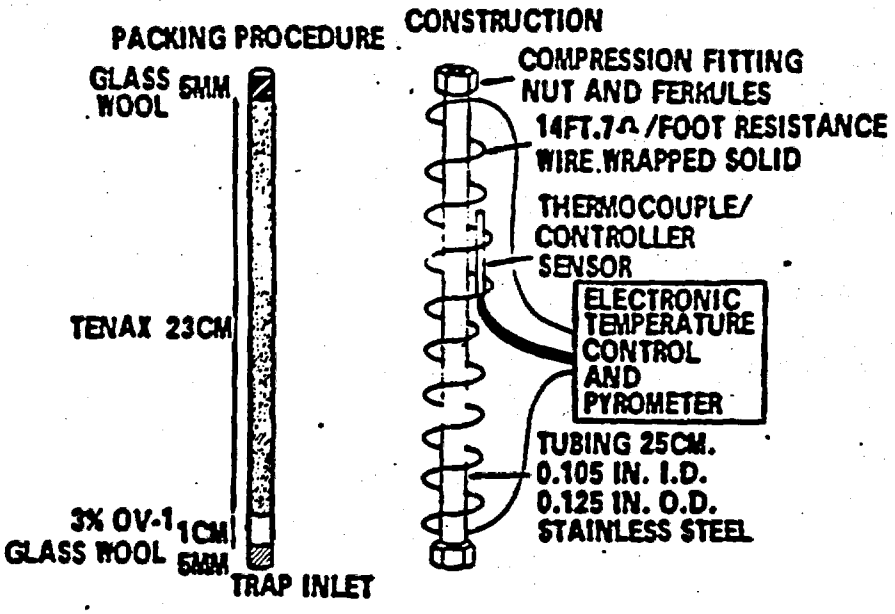

Figure 2. Trap packings and construction to include desorb capability.

AR301309

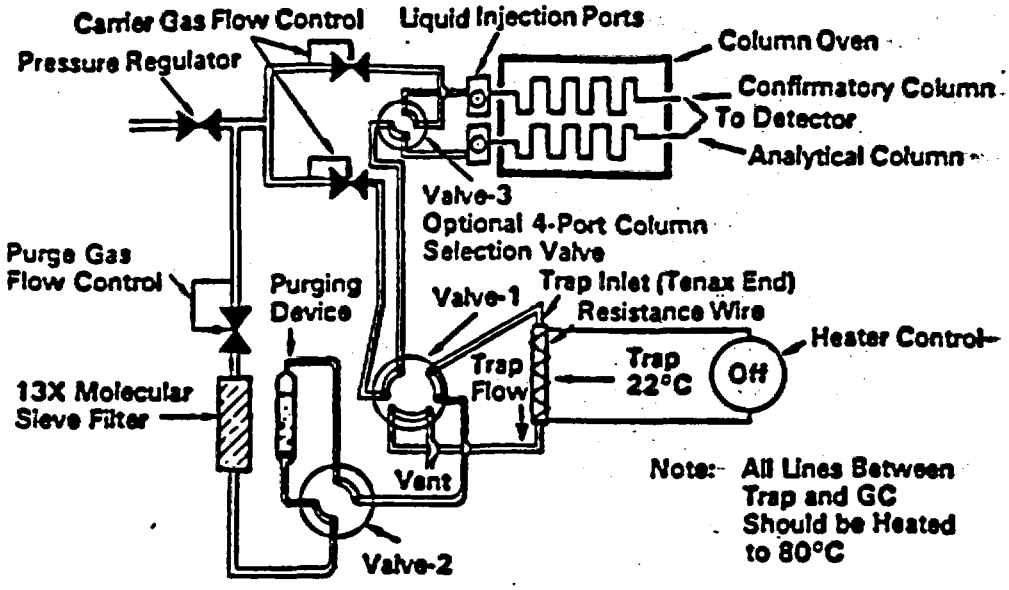

Figure 3. Purge and trap system - purge mode.

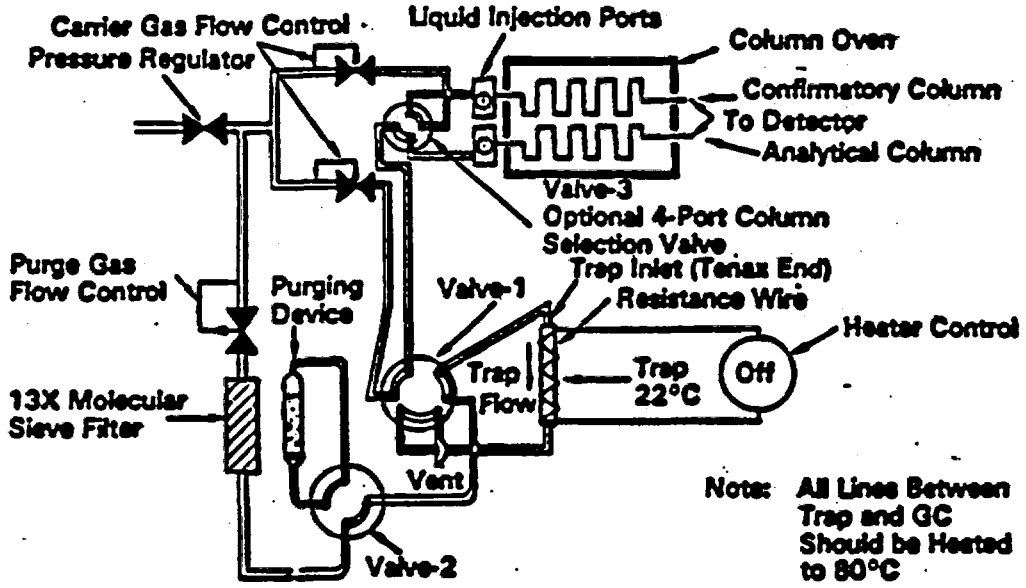

Figure 4. Purge and trap system-dry mode.

AR301310

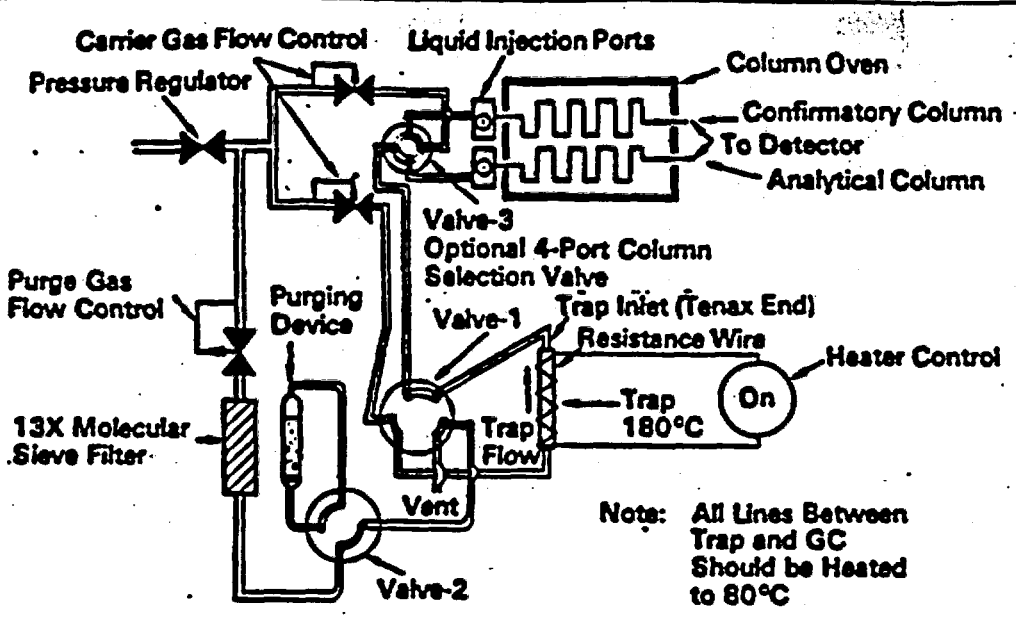

Figure 5. Purge and trap system-desorb mode.

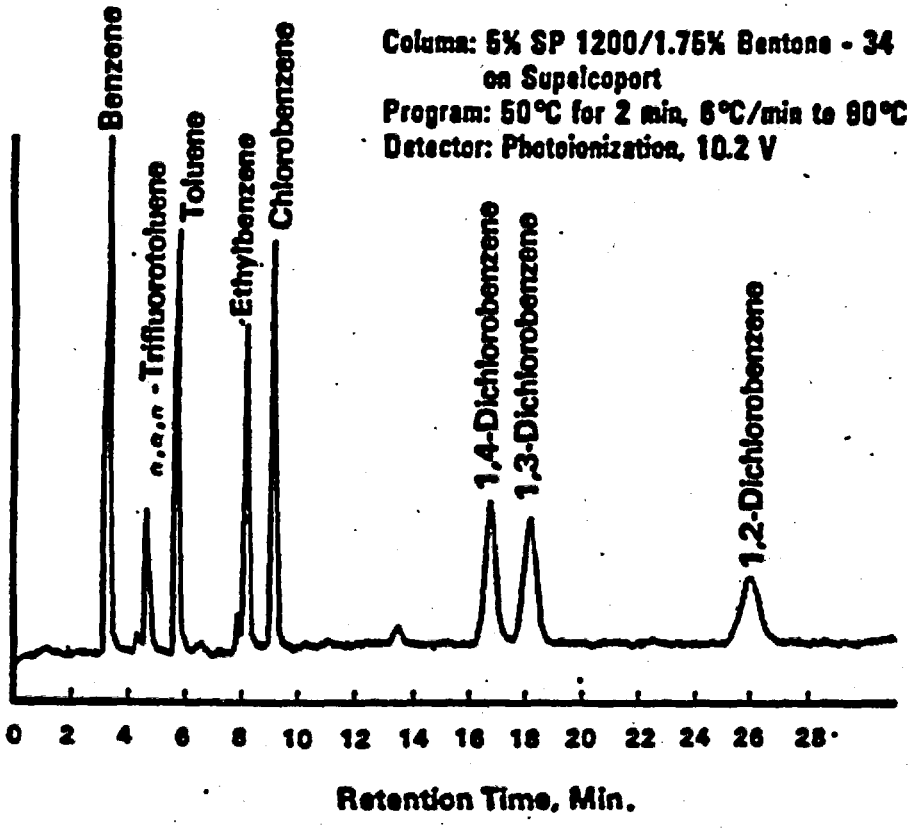

Figure 6. Gas chromatogram of purgeable aromatics.

AR301311

BILLING CODE 6560-50-C

E

AR301312

APPENDIX E

REM III TEAM LABORATORY REQUEST FORMS

REQUEST FOR LABORATORY SERVICES

REQUEST NO: 553 09 01 DATE: September 22, 1988

SITE: Croydon TCE TYPE: RI/FS EBAS NO: 553

SITE MANAGER: Ray Wattras FIRM: NUS Corporation

SAMPLE COLLECTION DATES: FROM: Nov. 14 TO: Nov. 18, 1988

TURN AROUND TIME: Specified in Contract

Contract Item No.	Type of Analysis	DQO Level	Sample Type	No. of Samples
47	Total Suspended Solids	III	Water	8
27a	Alkalinity	III	Water	8
	Note: These dates are tentative and are dependent on the project remaining on schedule.			

SITE CONTACT: Greg Zimmerman PHONE: (412) 788-1080

If there are any special requirements, please contact LSM, as submission of SAS may be necessary.

AR301314

REQUEST FOR LABORATORY SERVICES
QC SPECIFICATIONS

A. LABORATORY QUALITY CONTROL

	Frequency	Desired Limits
Method Blank	1/20	Below Det. Limits
Duplicates	1/20	+/- 20%
Matrix Spike		
Matrix Spike Dup.		

B. DETECTION LIMITS AS SPECIFIED IN CONTRACT: YES: X NO: ____

If NO Specify: _____

Parameter	DL	Parameter	DL

C. IF QC LIMITS ARE EXCEEDED:

Repeat analysis and document corrective action:

_____

AR301315

553 09 02

REM III SAS No.

Ebasco Services Incorporated
REM III Program
Zone Program Management Office
2000 15th Street North
Arlington, VA 22201
Phone: (703) 558-7555

REM III TEAM LABORATORY
SPECIAL ANALYTICAL SERVICES
Regional Office Request

[ ] Regional Transmittal [ ] Telephone Request

A. Regional Office: NUS-Pittsburgh and Site Name: Croydon TCE

B. Regional Laboratory Service Coordinator: Greg Zimmerman

C. Telephone Number: (412) 788-1080

D. Date of Request: September 22, 1988

Please provide below a description of your request for Special Analytical Services under the REM III Program. In order to most efficiently obtain capability for your request, please address the following considerations, if applicable. Incomplete or erroneous information may result in delay in processing your request. Provide response on additional sheets or attach supplementary information as needed.

1. General description of analytical service requested: Analysis of 13 Soil samples for BTU, Percent Ash, Grain Size Distribution; Moisture Content, Nitrogen/Phosphorous, Total Organic Carbon (TOC), COD, BOD, Cation Exchange Capacity (CEC), and pH.

2. Definition and number of work units involved (specify whether whole samples or fractions; whether organics or inorganics; whether aqueous or soil and sediments; or whether low, medium, or high concentration: 13 low concentration soil samples.

3. Purpose of analysis (specify whether Remedial or Enforcement Action, RCRA, NPDES, etc.): RI/FS

4. Data Quality Objectives (specify whether screening analysis, engineering support or confirmational analysis): Engineering Support DQO Level III.

5. Estimated date(s) of collection: October 31 - November 4, 1988.

6. Estimated date(s) and method of shipment: October 31 - Nov. 4, 1988. Samples will be shipped by overnight air carrier. These dates are tentative and are dependent on the project remaining on schedule.

7. Approximate number of days results are required after receipt of samples by laboratory: 40 days

8. Analytical protocol required (attach copy if protocol other than currently approved under this contract or CLP program):
BTU - ASTM D 3286-85 All methods are attached.
Percent Ash - ASTM D 2974-84
Grain Size Distribution - ASTM D 422-63
Moisture Content - ASTM D 2216-80
Nitrogen - pages 3-201 and 3-183; Phosphorous - page 3-227; COD - page 3-393; BOD - page 3-380; and TOC - page 3-73 from "Procedures for Handling and Chemical Analysis of Sediment and Water Samples", EPA, May 1981.
pH - SW 9045
CEC - SW 9081

9. Special technical instructions (if outside protocol requirements, specify compound names, detection limits, etc.):

10. Analytical results required (if known, specify format for data sheets, QA/QC reports, chain-of-custody, documentation, etc.). If not completed, format of results will be left to discretion of the laboratory: Data sheets, chain-of-custody forms, all calculations, and SAS Request Form.

AR301318

11. Other instructions (use additional sheets or attach supplementary information, as needed):

12. Name of sampling/shipping contact: Greg Zimmerman

Phone: (412) 788-1080

I. DATA REQUIREMENTS

PARAMETER	mg/l DETECTION LIMIT	PRECISION DESIRED (+ % or Conc.)
BTU	Not Specified	Not Specified
Percent Ash	Not Specified	Not Specified
Grain Size	Not Specified	Not Specified
Moisture Content	Not Specified	Not Specified
Nitrogen/Phosphorous	Not Specified	Not Specified
TOC	Not Specified	Not Specified
BOD/COD	Not Specified	Not Specified
pH/CEC	Not Specified	Not Specified

II. QUALITY CONTROL REQUIREMENTS

SAMPLES CONTROL REQUIRED	CONTROL FREQUENCY OF SAMPLES	PRECISION DESIRED LIMITS (+ or Conc.)
None Specified		

III. ACTION REQUIRED IF LIMITS ARE EXCEEDED:

None Specified

AR301320

2034-619y

D3286-85

© COPYRIGHT by American Society for Testing and Materials.
This copy is made with the permission of ASTM.
Any further reproduction is prohibited.

AR301321

Designation: D 3286 – 85

Standard Test Method for GROSS CALORIFIC VALUE OF COAL AND COKE BY THE ISOTHERMAL-JACKET BOMB CALORIMETER[1]

This standard is issued under the fixed designation D 3286, the number immediately following the designation indicates the year of original adoption or, in the case of revision, the year of last revision. A number in parentheses indicates the year of last reapproval. A superscript epsilon (ε) indicates an editorial change since the last revision or reapproval.

1. Scope

1.1 This test method covers the determination of the gross calorific value of coal and coke by the isothermal-jacket bomb calorimeter.

1.2 The values stated in SI units are to be regarded as the standard.

1.3 *This standard may involve hazardous materials, operations, and equipment. This standard does not purport to address all of the safety problems associated with its use. It is the responsibility of whoever uses this standard to consult and establish appropriate safety and health practices and determine the applicability of regulatory limitations prior to use.* Specific precautionary statements are given in Section 9.

2. Applicable Documents

2.1 *ASTM Standards:*

D 121 Definitions of Terms Relating to Coal and Coke[2]

D 346 Method of Collection and Preparation of Coke Samples for Laboratory Analysis[2]

D 1193 Specification for Reagent Water[3]

D 2013 Method of Preparing Coal Samples for Analysis[2]

D 3173 Test Method for Moisture in the Analysis Sample of Coal and Coke[2]

D 3177 Test Methods for Total Sulfur in the Analysis Sample of Coal and Coke[2]

D 3180 Method for Calculating Coal and Coke Analyses from As-Determined to Different Bases[2]

D 4239 Test Method for Sulfur in the Analysis Sample of Coal and Coke Using High Temperature Tube Furnace Combustion Methods[2]

E 1 Specification for ASTM Thermometers[4]

E 144 Recommended Practice for Safe Use of Oxygen Combustion Bombs[5]

3. Terminology

3.1 *Definitions:*

3.1.1 *calorific value*—the heat produced by combustion of a unit quantity of a substance under specified conditions. It is expressed in this test method in British thermal units per pound (Btu/lb). Calorific value may also be expressed in calories per gram (cal/g) or in the International System of Units (SI), joules per gram (J/g), when required. The unit equivalents are given in Table 1.

3.1.2 *gross calorific value (gross heat of combustion at constant volume), Q_v (gross)*—see Definitions D 121.

3.1.3 *net calorific value (net heat of combustion at constant pressure), Q_p (net)*—see Definitions D 121.

3.1.4 *calorimeter*—as used in this test method, consists of the bomb and its contents, the calorimeter vessel (bucket) with stirrer, the water in which the bomb is immersed, and the portions of the thermometer and the ignition leads within the calorimeter vessel.

3.2 *Descriptions of Terms Specific to this Standard*

3.2.1 *corrected temperature rise*—the temperature of the calorimeter caused by the process that occurs inside the bomb; that is the observed temperature change corrected for various effects as noted in 10.4.1.

---

[1] This test method is under the jurisdiction of ASTM Committee D-5 on Coal and Coke and is the direct responsibility of Subcommittee D05.21 on Methods of Analysis.

Current edition approved Aug 29, 1985. Published October 1985. Originally published as D 3286 – 73. Last previous edition D 3286 – 84.

[2] Annual Book of ASTM Standards, Vol 05.06.

[3] Annual Book of ASTM Standards, Vol 11.01.

[4] Annual Book of ASTM Standards, Vol 14.03.

[5] Annual Book of ASTM Standards, Vol 14.02.

AR301322

NOTE 1—Temperature is measured in either degrees Celsius or degrees Fahrenheit. Thermometer corrections should be applied. Temperatures may be recorded in ohms or other arbitrary units instead of degrees. Consistent units must be used in standardization and the actual calorific value determination. If arbitrary units other than degrees Celsius or Fahrenheit are used, the temperature interval over which all tests are made must not vary so much that an error greater than 0.001°C would be caused.

3.2.2 *energy equivalent, heat capacity, or water equivalent*—the energy required to raise the temperature of the calorimeter one arbitrary unit. This is the quantity that, when multiplied by the corrected temperature rise, then adjusted for extraneous heat effects, and divided by the mass of the sample, gives the gross calorific value.

NOTE 2—Energy units for quantities listed throughout this test method are such that the number of energy units per gram of sample corresponds exactly to the number of Btu's per pound of sample. For brevity these are referred to as Btu's. The actual energies are smaller than those stated by the ratio of the number of pounds per gram (1/453.59). The energy equivalent of the calorimeter has the units (Btu/lb) times (g/deg). Conversion to other units is discussed in Appendix X2. Time is expressed in minutes. Mass is expressed in grams.

4. Summary of Method

4.1 Calorific value is determined in this test method by burning a weighed sample, in oxygen, in a calibrated isothermal-jacket bomb calorimeter under controlled conditions. The calorimeter is standardized by burning benzoic acid. The calorific value of the sample is computed from temperature observations made before, during, and after combustion, and making proper allowances for heat contributed by other processes, and for thermometer and thermochemical corrections.

NOTE 3—Oxidation after sampling of susceptible low-rank coal or lignite may result in a reduction of calorific value. Unnecessary exposure of the sample to air from the time of sampling or delay in analysis shall be avoided.

5. Significance and Use

5.1 The gross calorific value is used to compute the total calorific content of the quantity of coal represented by the sample for payment purposes, provided the buyer and the seller mutually agree upon this.

5.2 The gross calorific value is used in computing the calorific value versus sulfur content to determine if the coal meets the regulatory requirements for industrial fuels.

5.3 The gross calorific value may be used for evaluating the effectiveness of beneficiation processes, or for research purposes.

6. Apparatus and Facilities

6.1 *Test Space*—A room or area free from drafts and that can be kept at a reasonably uniform temperature for the time required for the determination. The apparatus shall be shielded from direct sunlight and radiation from other heat sources. Thermostatic control of room temperature and controlled relative humidity are desirable.

6.2 *Combustion Bomb*, shall be constructed of materials that are not affected by the combustion process or products sufficiently to introduce measurable heat input of alteration of end products. The bomb must be designed so that all liquid combustion products can be completely recovered by washing the inner surfaces. There must be no gas leakage during a test. The bomb must be capable of withstanding a hydrostatic pressure test of 20 MPa (3000 psig) at room temperature without stressing any part beyond its elastic limit.

6.3 *Balance*—A laboratory balance having the capability to weigh the sample to the nearest 0.0001 g. The balance should be checked periodically to determine its accuracy.

6.4 *Calorimeter Vessel*, made of metal with a tarnish-resistant coating, and with all outer surfaces highly polished. Its size shall be such that the bomb will be completely immersed in water when the calorimeter is assembled. It shall have a device for stirring the water thoroughly and at a uniform rate but with minimum heat input. Continuous stirring for 10 min shall not raise the calorimeter temperature more than 0.01°C (0.02°F) starting with identical temperatures in the calorimeter, room, and jacket. The immersed portion of the stirrer shall be coupled to the outside through a material of low-heat conductivity.

6.5 *Jacket*, a double-walled, air, or water-filled jacket. The calorimeter shall be insulated from the jacket by an air space. The sides, top, and bottom of the calorimeter vessel shall be approximately 10 mm from the inner wall of the jacket to minimize convection currents. Mechanical supports for the calorimeter vessel shall provide as little thermal conduction as possible. The jacket shall be capable of maintaining the temperature constant to within ±0.1°C (±0.2°F) of room temperature at a calorimeter temperature 2°C (4°F) below, and 2°C (4°F) or more above

AR301323

room temperature throughout the determination. If a water-filled jacket is used, it shall have a device for stirring the water at a uniform rate with minimum heat input.

6.6 *Thermometers*, used to measure temperatures in the calorimeter and jacket shall be of any of the following types or combination thereof:

6.6.1 *Liquid-in-Glass Thermometers*, conforming to the requirements for ASTM Thermometers 56C, 56F, 116C, or 117C, as prescribed in Specification E 1. The thermometers shall be tested for accuracy against a known standard (preferably by the National Bureau of Standards). For thermometers 56C and 56F, the calibration should be at intervals no larger than 2.0°C or 2.5°F over the entire graduated scale. The maximum difference in correction between any two test points shall be no more than 0.02°C or 0.05°F. For thermometers 116C and 117C, the calibration should be at intervals no larger than 0.5°C over the entire calibrated range. The maximum difference in correction between any two test points shall not be more than 0.02°C.

6.6.2 *Beckmann Differential Thermometers*, (glass-enclosed scale, adjustable) having a range of approximately 6°C in 0.01°C subdivisions reading upward and conforming to the requirements for Thermometer 115C, as prescribed in Specification E 1, may be used. Each of these thermometers shall be tested for accuracy against a known standard (preferably by the National Bureau of Standards) at intervals no larger than 1°C over the entire graduated scale. The maximum difference in the correction between any two test points shall not be more than 0.02°C.

6.6.3 *Other Thermometers*, of an accuracy equal to or better than 0.001°C, such as platinum resistance or linear thermistor thermometers are satisfactory and may be used if properly calibrated. A Wheatstone bridge and galvanometer capable of measuring resistance to 0.0001 Ω are necessary for use with 25 Ω platinum resistance thermometers.

6.7 *Thermometer Accessories*—A magnifier is required for reading liquid-in-glass thermometers to one tenth of the smallest scale division. This shall have a lens and holder designed so as to introduce no significant errors due to parallax.

6.8 *Sample Holder*—An open crucible of platinum, quartz, or acceptable base-metal alloy. Base-metal alloy crucibles are acceptable if, after a few preliminary firings, the weight does not change significantly between tests.

6.9 *Ignition Wire*—The ignition wire shall be 100 mm of 0.16-mm diameter (No. 34 B & S gage) nickel-chromium alloy, (Chromel C) alloy, or iron wire. Platinum wire or palladium, 0.10-mm diameter (No. 38 B & S gage) may be used, provided constant ignition energy is supplied. The length or mass of ignition wire shall remain constant for all calibrations and calorific value determinations.

6.10 *Ignition Circuit*, for ignition purposes shall provide a 6 to 16 V alternating or direct current to the ignition wire. An ammeter or pilot light is required in the circuit to indicate when current is flowing. A step-down transformer, connected to an alternating current lighting circuit, or batteries, may be used.

6.11 *Buret*, used for the acid titration, shall have 0.1-mL divisions.

6.12 *Automated Controller and Temperature Measuring Accessories*, may be used.

7. Reagents

7.1 *Reagent Water*, conforming to Type II of Specification D 1193, shall be used for preparation of reagents and washing of the bomb interior.

7.2 *Purity of Reagents*—Reagent grade chemicals shall be used in all tests. Unless otherwise indicated, it is intended that all reagents shall conform to the specification of the Committee on Analytical Reagents of the American Chemical Society, where such specifications are available.[6] Other grades may be used, provided it is first ascertained that the reagent is of sufficiently high purity to permit its use without lessening the accuracy of the determination.

7.3 *Benzoic Acid* (C_6H_5COOH), shall be the National Bureau of Standards benzoic acid. The crystals shall be pelleted before use. Commercially prepared pellets may be used provided they are made from National Bureau of Standards benzoic acid. The value of heat of combustion of benzoic acid for use in the calibration calculations shall be in accordance with the value listed in the National Bureau of Standards certificate issued with the standard.

7.4 *Methyl Orange, Methyl Red, or Methyl*

[6] "Reagent Chemicals, American Chemical Society Specifications," Am. Chemical Soc., Washington, DC. For suggestions on the testing of reagents not listed by the American Chemical Society, see "Reagent Chemicals and Standards," by Joseph Rosin, D. Van Nostrand Co., Inc., New York, NY, and the "United States Pharmacopeia."

AR301324

Purple Indicator, may be used to titrate the acid formed during combustion. The indicator used shall be the same for both calibration and calorific value determinations.

7.5 *Oxygen*, shall be free of combustible matter. Only oxygen manufactured from liquid air, guaranteed to be greater than 99.5% pure, should be used. Oxygen made by the electrolytic process may contain a small amount of hydrogen rendering it unfit without purification.

7.6 *Sodium Carbonate Standard Solution*, sodium carbonate (Na_2CO_3) should be dried for 24 h at 105°C. Dissolve 20.9 g in water and dilute to 1 L. One millilitre of this solution is equivalent to 10.0 Btu in the nitric acid (HNO_3) titration.

8. Sample

8.1 The sample shall be the material pulverized to pass No. 60 (250-μm) sieve, prepared in accordance with either Method D 346 for coke, or Method D 2013 for coal.

8.2 A separate portion of the sample should be analyzed simultaneously for moisture content in accordance with Method D 2013 and Test Method D 3173, so that calculations to other bases can be made.

8.3 Sulfur analysis shall be made in accordance with Test Methods D 3177.

9. Safety Precautions

9.1 The following precautions are recommended for safe calorimeter operation. Additional precautions are given in Recommended Practice E 144. Also consult the calorimeter equipment manufacturer's installation and operating instructions before using the calorimeter.

9.2 The mass of coal or coke sample and the pressure of the oxygen admitted to the bomb must not exceed the bomb manufacturer's recommendations.

9.3 Bomb parts should be inspected carefully after each use. Threads of the main closure should be checked frequently for wear. Cracked or significantly worn parts should be replaced. The bomb should be returned to the manufacturer occasionally for inspection and possible proof firing.

9.4 The oxygen supply cylinder should be equipped with an approved type of safety device, such as a reducing valve, in addition to the needle valve and pressure gage used in regulating the oxygen feed to the bomb. Valves, gages, and gaskets must meet industry safety code. Suitable reducing valves and adaptors for 3 to 4-MPa (300 to 500-psi) discharge pressure are obtainable from commercial sources of compressed gas equipment. The pressure gage shall be checked periodically for accuracy.

9.5 During ignition of a sample, the operator must not permit any portion of her/his body to extend over the calorimeter.

9.6 When combustion aids are employed, extreme caution must be exercised not to exceed the bomb manufacturer's recommendations and to avoid damage to the bomb. Do not fire loose fluffy material, such as unpelleted benzoic acid, unless thoroughly mixed with the coal sample.

9.7 Do not fire the bomb if the bomb has been dropped or turned over after loading, or there is evidence of gas leakage when the bomb is submerged in the calorimeter water.

9.8 For manually operated calorimeters, the ignition circuit switch shall be of the momentary double-contact type, normally open, except when held closed by the operator. The switch should be depressed only long enough to fire the charge.

10. Standardization

10.1 The calorimeter is standardized by combustion of benzoic acid.

10.2 Determine the energy equivalent of the calorimeter for a specific temperature rise as the average of a series of ten individual runs made over a period of not less than 3 days nor more than 5 days. To be acceptable, the standard deviation of the series shall be 6.5 Btu/°C (3.6 Btu/°F) or less (see Table 2). For this purpose, any individual test may be discarded only if there is evidence indicating incomplete combustion. If this limitation is not met, investigate for the source of the problem, correct it, then repeat the entire series to obtain a standard deviation within the acceptable limits.

10.3 *Procedure:*

10.3.1 Regulate the weights of the pellets of benzoic acid in each series to yield approximately the same temperature rise as that obtained with the coals tested in the same laboratory. The usual range of masses is from 0.9 to 1.3 g. Weigh the pellet to the nearest 0.0001 g in the sample holder in which it is to be burned, and record the weight as the mass.

10.3.2 Rinse the bomb, invert to drain, and leave undried. Add 1.0 mL of water to the bomb

AR301325

prior to assembly for a determination.

10.3.3 Connect a measured length of ignition wire to the ignition terminals, with enough slack to allow the ignition wire to maintain contact with the sample.

10.3.4 Assemble the bomb and charge it with oxygen to a constant pressure between 2 to 3 MPa (20 to 30 atm). This pressure must remain the same for each calibration and each calorific-value determination. Admit the oxygen slowly into the bomb so as not to blow powdered material from the sample holder. If the pressure exceeds the specified pressure, do not proceed with the combustion. Instead, detach the filling connection and exhaust the bomb in the usual manner, and discard the sample.

10.3.5 Fill the calorimeter vessel (bucket) with the measured (or weighed) quantity of water adjusted from 1.0 to 2.0°C (2.0 to 4.0°F) below the jacket temperature, but not lower than 20°C (68°F) (Note 4). Use the same mass of water in each test weighed to ±0.5 g. For 2000-mL calorimeters, the proper quantity can be obtained by use of a volumetric flask calibrated to deliver 2000 ± 0.5 mL. As the density of water varies with temperature, make suitable corrections if the water temperature varies from the temperature at which the flask was calibrated. Place the assembled bomb in the calorimeter vessel. Check that no oxygen bubbles are leaking from the bomb. Place the calorimeter vessel in the jacket; connect the electrodes; place the stirrer, thermometers, and cover in position. Start the stirrer(s) and continue to operate it (them) throughout the determination. Examine the thermometers for liquid separation and correct any separation before proceeding. The starting temperature should be within ±0.5°C (±0.9°F) of that used in the analysis of coal or coke samples.

NOTE 4—The initial temperature adjustment will cause a final temperature slightly above that of the jacket for 2000-mL calorimeters. Some operators prefer a lower initial temperature so that the final temperature is slightly below that of the jacket. This procedure is also satisfactory. Whichever procedure is used, the same procedure should be used in all tests, including standardization. A small heater may be built into the calorimeter so that the desired starting temperature can be easily attained.

NOTE 5—Check all liquid-in-glass thermometers at least daily for any defects, for example, cracked glass, etc.

10.3.6 Allow 5 min for attainment of equilibrium; then record the calorimeter temperature at 1-min intervals for 5 min or until the rate of change has been nearly constant for 5 min. Use a magnifier when using ASTM Bomb Calorimeter Thermometers 56C or 56F, and estimate all of the readings (except those during the rapid-rise period) to the nearest 0.002°C or 0.005°F. Estimate ASTM Thermometers 115C, 116C, or 117C readings to 0.001°C, and 25 Ω resistance thermometer readings to the nearest 0.0001 Ω. Tap mercury thermometers (for instance with a pencil) just before reading to avoid errors caused by mercury sticking to the walls of the capillary. Ignite the charge at the start of the sixth minute and record the time, t_i and the thermometer reading, t_i (Note 6). Take the next two readings 0.5 min and 1 min after firing because of the rapid rise. Record subsequent readings at 1-min intervals on the minute until the difference between successive readings has been constant for 5-min. If the final temperature is above the bath temperature, the temperature rises to a maximum and then begins to fall. Record the time, t_f and the thermometer reading, t_f, after the rate of change has become uniform.

NOTE 6—The calorimeter water temperature must be at the same temperature (±0.05°C) for every determination, at the time of firing, if the Bureau of Mines method for radiation correction is to be used. See Annex A1.5.

10.3.7 Open the cover and remove the bomb. Release the pressure at a uniform rate, such that the operation will require not less than 1 min. Open the bomb and examine the bomb interior. Discard the test if unburned sample or sooty deposits are found. Wash the interior of the bomb with distilled water containing the titration indicator until the washings are free of acid, and titrate the washings with standard sodium carbonate solution.

10.3.8 Remove and measure, or weigh, the combined pieces of unburned ignition (firing) wire and subtract from the original length or weight to determine the wire consumed in firing. If the wire is weighed, remove the ball of oxidized metal from the end of each piece of wire before weighing.

10.4 *Calculations:*

10.4.1 *Temperature Rise*—Using data obtained as prescribed in 10.3.6, compute the corrected temperature rise, t, as follows:

$$t = t_f - t_i + C_1 + C_2 + C_3 \quad (1)$$

AR301326

where:

t = corrected temperature rise, °C or °F.
t_i = initial temperature reading at time of firing.
t_f = final temperature reading.
C'_t = thermometer, emergent stem correction, if required (see Note 7 and Annex A1.4).
C'_s = thermometer setting correction, if required (see Note 7 and Annex A1.3), and
C'_r = radiation correction (see Note 7 and Annex A1.5).

NOTE 7—With all mercury-in-glass thermometers, it is necessary to make corrections if the total calorific value is altered by 5 Btu or more. This represents a change of 0.001°C or 0.002°F in a calorimeter using approximately 2000 g of water. Beckmann thermometers also require a setting correction and an emergent stem correction (Annex A1.3 and A1.4). Solid-stem ASTM Thermometers 56C and 56F do not require emergent stem corrections if all tests, including standardization, are performed within the same 5.5°C (10°F) interval. If operating temperatures range beyond this limit, a differential emergent stem correction (Annex A1.4) must be applied to the corrected temperature rise, t, in all tests, including standardization. A radiation correction must be made in all tests, including standardization.

10.4.2 *Thermochemical Corrections* (see Appendix X1)—Compute the following for each test:

e_1 = correction for the heat of formation of HNO_3, in Btu. Each millilitre of standard Na_2CO_3 is equivalent to 10.0 Btu, and
e_2 = correction for heat of combustion of firing wire, in Btu (Note 8).
= 0.41 Btu/mm or 2.6 Btu/mg for No. 34 B & S gage Chromel C.
= 0.49 Btu/mm or 3.2 Btu/mg for No. 34 B & S gage iron wire.

NOTE 8—There is no correction for platinum wire provided the ignition energy is constant.

10.4.3 Compute the calorimeter energy equivalent, E, by substituting in the following:

$$E = (Hg + e_1 + e_2)/t \quad (2)$$

where:

E = calorimeter energy equivalent (Note 9),
H = heat of combustion of benzoic acid, as stated in the National Bureau of Standards certificate, Btu/lb in air,
g = mass (weight in air) of benzoic acid, g,
e_1 = titration correction (10.4.2),
e_2 = fuse wire correction (10.4.2), and
t = corrected temperature rise (10.4.1).

NOTE 9—Using the units and corrections as given in 10.4.1 and 10.4.2, the energy equivalent of the calorimeter is such that the calorific value of the coal sample will be obtained directly in British thermal units per pound when the mass sample is taken in grams. The units of the energy equivalent are therefore: (Btu/lb) times (g/deg).

10.5 Repeat the procedure for a total of ten determinations. Compute the standard deviation as illustrated in Table 2.

11. Restandardization

11.1 Make checks on the energy equivalent value after changing the oxygen supply, after changing any part of the calorimeter, and at least once a month otherwise.

11.1.1 If a single new determination differs from the old standard value by 6 Btu/°C (4 Btu/°F) the old standard value is suspect, thereby requiring a second test.

11.1.2 The difference between the two new determinations must not exceed 8 Btu/°C (5 Btu/°F), and the average of the two new determinations must not differ from the old standard by more than 4 Btu/°C (3 Btu/°F). If these requirements are met, do not change the calorimeter standard.

11.1.3 If the requirements given in 11.1.2 are not met, two more determinations must be run. The range of the four values must not exceed 14 Btu/°C (8 Btu/°F), and the average of the four new determinations must not differ from the old standard value by more than 3 Btu/°C (2 Btu/°F). If these requirements are met, do not change the calorimeter standard.

11.1.4 If the requirements given in 11.1.3 are not met, a fifth and sixth determination must be run. The range of the six new determinations must not exceed 17 Btu/°C (10 Btu/°F), and the average of the six values must not differ from the old standard value by more than 2 Btu/°C (2 Btu/°F). If these requirements are met, do not change the calorimeter standard.

11.1.5 If the requirements given in 11.1.4 are not met, four more determinations must be run to complete a series of ten runs. The range of these ten results must not exceed 20 Btu/°C (12 Btu/°F), and the average of the ten new values must not differ from the old standard by more than 1 Btu/°C (1 Btu/°F). If these requirements are met, do not change the calorimeter standard.

11.1.6 If the requirements given in 11.1.5 are not met, the average value from the ten new

AR301327

values must be used for the new standard energy equivalent, provided that the standard deviation of the series does not exceed 6.5 Btu/°C (3.6 Btu/°F).

11.2 The summary of the numerical requirements at each stage of restandardization is given in Table 3.

12. Procedure for Coal and Coke Samples (Note 10)

12.1 Thoroughly mix the analysis sample of coal or coke in the sample bottle and carefully weigh approximately 1 g of it into the sample holder. The sample shall be weighed to the nearest 0.0001 g. Make each determination in accordance with the procedure described in 10.3.2 through 10.3.8.

NOTE 10—For anthracite, coke, and coal of high ash content, that do not readily burn completely, one of the following procedures are recommended (1) The inside of the sample holder is lined completely with ignited asbestos in a thin layer pressed well down into the angles, and the sample is then sprinkled evenly over the surface of the asbestos (2) The mass of the sample may be varied to obtain good ignition. If the mass is varied, it will be necessary to recalibrate the calorimeter so that the water equivalent will be based on the same temperature rise as that obtained with the new sample weight. (3) A known amount of benzoic acid may be mixed with the sample. Proper allowance must be made for the heat of combustion of benzoic acid when determining the calorific value of the sample

NOTE 11—For the calorific value of coke, it is necessary to use 3 MPa (30 atm) pressure for both standardization and analysis.

12.2 Determine the sulfur content of the sample by any of the procedures described in Test Methods D 3177.

13. Calculations (Note 2)

13.1 Compute the corrected temperature rise, t, as shown in 10.4.1.

13.2 *Thermochemical Corrections* (Appendix X1)—Compute the following for each test:

c_1 = correction for the heat of formation of HNO_3, Btu. Each milliliter of standard sodium carbonate is equivalent to 10.0 Btu.

c_2 = correction for heat of combustion of ignition wire, Btu.

= 0.41 Btu/mm or 2.6 Btu/mg for No. 34 B & S Chromel C wire.

= 0.49 Btu/mm or 3.2 Btu/mg for No. 34 B & S gage iron wire (Note 8), and

c_3 = correction for difference between heat of formation of H_2SO_4 from the heat of formation HNO_3, Btu.

= 23.7 times percent of sulfur in sample times weight of sample, g

14. Calorific Value (Note 12)

14.1 *Gross Calorific Value*—Calculate the gross calorific value (gross heat of combustion at constant volume) Q_v (gross) as follows:

$$Q_v \text{ (gross)} = (tK) - c_1 - c_2 - c_3)/g \qquad (3)$$

where:

Q_v (gross) = gross calorific value, Btu/lb,

t = corrected temperature rise as calculated in 13.1,

K = energy equivalent calculated in 10.4.3,

c_1, c_2, c_3 = corrections as prescribed in 13.2, and

g = mass of sample, g.

14.2 *Net Calorific Value*—Calculate the net calorific value (net heat of combustion at a constant pressure), Q_p (net) as follows:

$$Q_p \text{ (net)} = Q_v \text{ (gross)} - 10.30\,(H \times 9)$$

where:

Q_p (net) = net calorific value, Btu/lb,

Q_v (gross) = gross calorific value, Btu/lb, and

H = total hydrogen, %.

NOTE 12—This calculation gives calorific value in Btu/lb. To obtain calorific value in J/g, see Appendix X2.

15. Report

15.1 The results of the calorific value may be reported on any of a number of bases, differing from each other in the manner that moisture is treated.

15.2 Use the percentage of moisture in the sample passing a No. 60 (250-µm) sieve, Test Method D 3173, to calculate the results of the analysis sample to a dry basis.

15.3 Procedures for converting the value obtained on the analysis sample to other bases are described in Method D 3180.

16. Precision and Bias

16.1 The following criteria should be used for judging the acceptability of results (95% probability) on split 60-mesh (250-µm) samples.

16.1.1 *Repeatability*—Duplicate results by the same laboratory using the same operator and equipment, should not be considered suspect

AR301328

unless they differ by more than 50 Btu/lb on a dry basis.

16.1.2 *Reproducibility*—The results submitted by two or more laboratories (different equipment, operators, date of test, and different portions of the same pulp) should not be considered suspect unless the two results differ by more than 100 Btu/lb on a dry basis.

16.1.3 *Bias*—There should be no bias because the equipment is standardized with a compound having a known heat of combustion.

TABLE 1 Calorific Value

1 Btu = 1055.06 J	1 Btu/lb = 2.326 J/g
1 Calorie[a] = 4.1868 J	1.8 Btu/lb = 1.0 cal/g

[a] International tables calorie.

TABLE 2 Standard Deviations for Calorimeter Standardization[a]

Standardization Number	Column A Energy Equivalent (Btu/lb) × (g/°C)	Column B Code to 4400 (Column A-4400)	Column C (Column B)[2]
1	4412	12	144
2	4407	7	49
3	4415	15	225
4	4408	8	64
5	4404	4	16
6	4406	6	36
7	4409	9	81
8	4410	10	100
9	4412	12	144
10	4409	9	81
SUM		92	940

Average = $\bar{X}$ = Σ X/10 = (92/10) + 4400 = 4409

$$\text{Variance} = s^2 = \frac{\Sigma\,\text{Column C} - [(\Sigma\,\text{Column B})^2/n]}{n-1} = \frac{940 - [(92)^2/10]}{9} = 10.4$$

Standard deviation = $s = \sqrt{\text{variance}} = \sqrt{10.4} = 3.22$

[a] In this example the values of energy equivalent are typical for a calorimeter calibrated so that, if the energy equivalent is multiplied by the temperature rise in degrees Celsius per gram of sample, the calorific value of the sample will be obtained in British Thermal units per pound.

TABLE 3 Summary of Numerical Requirements

NOTE—Test values exceeding table limits require additional runs.[a]

Number of Runs	Maximum Range of Results		Maximum Difference between $\bar{X}_1$ and $\bar{X}_2$[b]	
	Btu/°C	Btu/°F	Btu/°C	Btu/°F
1			±6	±4
2	8	5	±4	±3
4	14	8	±3	±2
6	17	10	±2	±2
10	20	12	±1	±1

[a] Values in this table have been rounded after statistical calculation, and are therefore not precisely in a ratio from 1.8 to 1.0.

[b] $\bar{X}_1$ = average of original standard, and $\bar{X}_2$ = average of check runs.

AR301329

ANNEX

(Mandatory Information)

A1. THERMOMETRIC CORRECTIONS

A1.1 Thermometer Corrections

A1.1.1 It is necessary to make the following individual corrections if not making the corrections would result in an equivalent change of 5.0 Btu or more.

A1.1.2 *Calibration Correction*, shall be made in accordance with the calibration certificate furnished by the calibration authority.

A1.1.3 *Setting Correction*, necessary for the Beckmann thermometer. It shall be made in accordance with the directions furnished by the calibration authority.

A1.1.4 *Differential Emergent Stem Correction*, the calculation of differential stem correction depends upon the way the thermometer was calibrated and how it is used. Two conditions are possible:

A1.1.4.1 *Thermometers Calibrated in Total Immersion and Used in Partial Immersion*—This emergent stem correction is made as follows:

$$\text{Correction} = C_e = K\,(t_f - t_i)\,(t_f + t_i - L - T)$$

where:

C_e = emergent stem correction,
K = 0.00016 for thermometers calibrated in °C, and 0.00009 for thermometers calibrated in °F,
L = scale reading to which the thermometer was immersed,
T = mean temperature of emergent stem,
t_i = initial temperature reading, and
t_f = final temperature reading.

NOTE A1.1—*Example*: Assume the point L_o to which the thermometer was immersed was 16°C; its initial reading, t_i, was 24.127°C, its final reading, t_f, was 27.876, the mean temperature of the emergent stem, T, was 26°C:

Differential stem correction, C_e
= 0.00016 (28 − 24) (28 + 24 − 16 − 26)
= 0.0064°C.

A1.1.4.2 *Thermometers Calibrated and Used in Partial Immersion, But at a Different Temperature than the Calibrated Temperature*—This emergent stem correction is made as follows:

$$\text{Correction} = C_e = K\,(t_f - t_i)\,(t_o - t_c)$$

where:

C_e = emergent stem correction,
K = 0.00016 for thermometers calibrated in °C, and 0.00009 for thermometers calibrated in °F,
t_i = initial temperature reading,
t_f = final temperature reading,
t_o = observed stem temperature, and
t_c = stem temperature at which the thermometer was calibrated.

NOTE A1.2—*Example*: Assume the initial reading, t_i, was 80°F, the final reading, t_f, was 86°F, and that the observed stem temperature, t_o, was 82°F, and the calibration temperature, t_c, was 72°F, then:

Differential stem correction, C_e
= 0.00009 (86 − 80) (82 − 72)
= 0.005°F.

A1.1.5 *Radiation Corrections*—These are used to calculate heat loss to the water jacket. They are based on the Dickinson formula,[7] the Regnault-Pfaundler formula,[8] or the U.S. Bureau of Mines method.[9] The same method of determining the radiation correction must be used consistently in calibration and test measurements.

A1.1.5.1 *Dickinson Formula*:

$$C_r = -r_1\,(h - t) - r_2\,(f - h)$$

where:

C_r = radiation correction,
r_1 = rate of rise in temperature per minute in the preliminary period,
r_2 = rate of rise of temperature per minute in the final period (if temperature is falling, r_2 is negative),
t_i = firing temperature,
t_f = final temperature, being the first temperature after which the rate of change is constant,
t = time at temperature, t_i, min,
h = time at temperature, $t_i + 0.60\,(t_f - t_i)$, min, and
f = time at temperature, t_f, min.

A1.1.5.2 *Regnault-Pfaundler Formula*

$$C_r = nr_1 + kS$$

where:

C_r = radiation correction,
n = number of minutes in the combustion period,
k = $(r_1 - r_2)/(t^* - t')$,
S = $t_0 - 1 + (1/2)\,(t_i + t_f)\,nt'$,
t' = average temperature during the preliminary period,
t^* = average temperature during the final period,
$t_1, t_2, t_3 \ldots t_n$ = successive temperature recorded

[7] Dickinson, H. C., Bulletin U.S. Bureau of Standards, Vol 11, 1951, p. 189.
[8] Pfaundler, L., *Annalen der Physik* (Leipzig), ANPYA, Vol 129, 1866, p. 102.
[9] "Methods of Analyzing and Testing Coal and Coke," *U.S. Bureau of Mines Bulletin 638*, XMBU4, 1967, pp. 16-17.

AR301330

during the combustion period, and

$t_n - 1$ = sum of t_1, t_2, t_3 ..... $t_n - 1$.

A1.1.5.3 *Bureau of Mines Method*—A table of radiation correction can be established so that only the initial and final readings are required to determine the heat value of any fuel. This may be done by carrying out a series of tests utilizing the procedure described in Section 10, using the following conditions. Regulate the amount of sample burned so that a series of determinations is made in which different temperature rises are obtained. For all determinations, keep the water jacket temperature constant, fire the bomb at the same initial temperature, and have the same time, $f - i$, elapse (±2 s) between the initial and final readings. Determine the radiation corrections for each of the series of temperature rises using the Dickinson method (see A1.1.5.1), or the Regnault-Pfaundler method (see A1.1.5.2). These corrections are constant for a given temperature rise. From the series of readings a table or graph is plotted to show radiation correction versus temperature rise. Once the table or graph is established, the radiation corrections can be obtained from it until there is a major change in the equipment.

APPENDIXES

(Nonmandatory Information)

X1. THERMOCHEMICAL CORRECTIONS

X1.1 *Energy of Formation of Nitric Acid*—A correction, e_1, (10.4.2 and 13.2) is applied for the acid titration. This correction is based on the assumptions (*1*) that all the acid titrated is HNO_3 formed by the following reaction: $\frac{1}{2} N_2 (g) + \frac{5}{4} O_2 (g) + \frac{1}{2} H_2O (l) = HNO_3$ (in 500 mol H_2O), and (*2*) that the energy of formation of HNO_3 in approximately 500 mol of water under bomb conditions is minus 59.0 kJ/mol.[16]

X1.1.1 A convenient concentration of Na_2CO_3 is 0.394 *N* (20.9 g Na_2CO_3/1000 mL) which gives e_1 = 10 multiply *V*, where *V* is the volume of Na_2CO_3 in millilitres. The factor 10.0 (0.394 × 59.0 ÷ 2.326) is to be used for calculating calorific value in Btu/lb. For other units see Table X2.1. When H_2SO_4 is also present, a part of the correction for H_2SO_4 is contained in the e_1 correction and the remainder in the e_3 correction.

X1.2 *Energy of Formation of Sulfuric Acid*—By definition (see Definitions D 121) the gross calorific value is obtained when the product of the combustion of sulfur in the sample is SO_2 (g). However, in actual bomb combustion processes, all the sulfur is found as H_2SO_4 in the bomb washings. A correction e_3 (see 13.2) is applied for the sulfur that is converted to H_2SO_4. This correction is based upon the energy of formation of H_2SO_4 in solutions, such as will be present in the bomb at the end of a combustion. This energy is taken as −295.0 kJ/mol.[17] A correction of 2 times 59.0 kJ/mol of sulfur was applied in the e_1 correction, so the additional correction necessary is 295.0 − (2 times 59.0) = 177 kJ/mol, or 5.52 kJ/g of sulfur in the sample (55.2 J times weight of sample in grams times percent sulfur in sample). This causes e_3 to be 23.7 times weight of samples in grams times percent sulfur in sample. The factor 23.7 (= 55.2/2.326) for e_3 (see 13.2) is to be used for calculating calorific value in Btu/lb. For other units, see Appendix X2. The values above are based on a coal containing about 5 % sulfur and about 5 % hydrogen. The assumption is also made that the H_2SO_4 is dissolved entirely in the water condensed during combustion of the sample.[12]

X1.2.1 If a 1-g sample of such a fuel is burned, the resulting H_2SO_4 condensed with water formed on the walls of the bomb will have a ratio of about 15 mol of water to 1 mol of H_2SO_4. For this concentration the energy of the reaction $SO_2 (g) + \frac{1}{2} O_2 (g) + H_2O (l) = H_2SO_4$ (in 15 mol of H_2O) under the conditions of the bomb process is −295 kJ/mol.[12] Basing the calculation upon a sample of comparatively large sulfur content reduces the possible overall errors, because, for small percentages of sulfur, the correction is smaller.

X1.3 *Fuse (Ignition) Wire*—Calculate the energy contributed by burning the fuse wire in accordance with the directions furnished by the supplier of the wire. For example, the energy of the combustion of No. 34 B & S gage Chromel C wire is 6.0 J/mg or approximately 0.95 J/mm. For calculating e_2 for use in Eqs 2 and 3, these give e_2 = 0.41 times length (mm) of wire or e_2 = 2.6 times weight (mg) of wire. The energy required to melt a platinum wire is constant for each experiment if the same amount of platinum wire is used. As the energy is small, its effect is essentially cancelled out in the relationship between the standardization experiments and the calorific value determinations, and it can be neglected. The factors listed above for e_2 (10.4.2 and 13.2) are suitable for calculating calorific value in Btu/lb. For other units, see Appendix X2.

[16] Calculated from data in National Bureau of Standards Technical Note 270-3.

[17] Calculated from data in National Bureau of Standards Circular 500.

[12] Mott, R. A., and Parker, C., "Studies in Bomb Calorimetry IX—Formation of Sulfuric Acid," *Fuel*, J.I.F.I.B., Vol 37, 1958, p. 371.

AR301331

X2. REPORTING RESULTS IN OTHER UNITS

X2.1 *Reporting Results in Joules per Gram*

X2.1.1 The gross calorific value can be expressed in joules per gram, calories per gram, or British thermal units per pound. The relationships between these units are given in Table 1.

X2.1.2 Because the energy of combustion of the reference material is measured and certified by the National Bureau of Standards in joules per gram, the most straightforward usage of the reference material would lead to the calorific value of the fuel in joules per gram. To carry out this procedure, we make changes outlined in X2.1.3 through X2.1.5.

X2.1.3 For calculating energy equivalent, substitute Eq 2' for Eq 2:

$$E = [I(H'g) + c_1' + c_2']/t \qquad (2')$$

where the meanings of the symbols in Eq 2' are the same as in Eq 2 except that:

E' = energy equivalent, with units of joules per temperature unit,

H' = heat of combustion of reference material, with units of joules per gram weight in air (J/g from the certificate for the NBS benzoic acid), and

c_1', c_2', and c_3' = corrections, with units of joules (see Table X2.1).

X2.1.4 For calculating gross calorific value, substitute Eq 3' for Eq 3:

$$Q_v\,(\text{gross}) = [(tE') - c_1' - c_2' - c_3']/g \qquad (3')$$

where the meanings of the symbols in Eq 3' are the same as in Eq 3 except that:

Q_v (gross) = gross calorific value with units of joules per gram (weight in air),

E' = energy equivalent, with units of joules per temperature unit, and

c_1', c_2', and c_3' = corrections, with units of joules (see Table X2.1).

X2.1.5 *Precision:*

X2.1.5.1 *Repeatability*—Duplicate results by the same laboratory, using the same operator and equipment, should not be considered suspect unless they differ by more than 120 J/g.

X2.1.5.2 *Reproducibility*—The results submitted by two or more laboratories (different equipment, operators, date of test, and different portions of the same pulp) should not be considered suspect unless the results differ by more than 240 J/g.

TABLE X2.1 Alternative Thermochemical Correction Factors (Results in Joules)[A]

Correction	Multiplication Factor	Multiply By
c_1' (HNO_3)	20 J/mL	mL of 0.34 N Na_2CO_3
c_2' (H_2SO_4)	55.2 J/cg%	percentage of sulfur in sample times mass of sample in grams
c_3' (fuse wire)	0.99 J/mm	length (mm) of No. 34 B & S gage Chromel C wire
or		
c_3' (fuse wire)	1.14 J/mm	length (mm) of No. 34 B & S gage iron wire
c_3' (fuse wire)	0.0 J/mg	mass (mg) of Chromel C wire
or		
c_3' (fuse wire)	2.4 J/mg	mass (mg) of iron wire

[A] To be used in Eqs 2' and 3' only.

The American Society for Testing and Materials takes no position regarding the validity of any patent rights asserted in connection with any item mentioned in this standard. Users of this standard are expressly advised that determination of the validity of any such patent rights, and the risk of infringement of such rights, are entirely their own responsibility.

This standard is subject to revision at any time by the responsible technical committee and must be reviewed every five years and if not revised, either reapproved or withdrawn. Your comments are invited either for revision of this standard or for additional standards and should be addressed to ASTM Headquarters. Your comments will receive careful consideration at a meeting of the responsible technical committee, which you may attend. If you feel that your comments have not received a fair hearing you should make your views known to the ASTM Committee on Standards, 1916 Race St., Philadelphia, PA 19103.

AR301332

f .IgO. 15 g of powdered K_2SO_4. of H_2SO_4. Place the flask in an n and heat gradually. Then boil : solution clears. Continue boil- ational 30 min. Cool, add about ater, cool below 25°C, add 25 mL n and mix to precipitate the pinch of zinc to prevent bump- flask, and add a layer of NaOH fficient to make the contents e. Do not agitate the mixture. nnect the flask to the digestion denser. Have the tip of the con- ersed in the H_3BO_3 solution (this asured) in the receiver and then o mix the contents thoroughly. e ammonia has distilled (at least stillate). Titrate with standard acid icator to violet end point.

percentage nitrogen as fol-

ed), % = $(A \times B) \times 0.14$

of 0.1 N to 0.3 N H_2SO_4 re- titration of the solution, and lity of the H_2SO_4.

the nearest 0.1 % the nitrogen as-received sample.

d Accuracy

ision of this method has not ned. Data are being sought that r use in developing precision

he validity of any patent rights asserted in s advised that determination of the validity responsibility.

mittee and must be reviewed every five years or revision of this standard or for additional careful consideration at a meeting of the e not received a fair hearing you should hia, Pa. 19103.

Designation: D 2974 – 84

Vol. 04.08

Standard Test Methods for MOISTURE, ASH, AND ORGANIC MATTER OF PEAT MATERIALS[1]

This standard is issued under the fixed designation D 2974; the number immediately following the designation indicates the year of original adoption or, in the case of revision, the year of last revision. A number in parentheses indicates the year of last reapproval. A superscript epsilon (ε) indicates an editorial change since the last revision or reapproval.

1. Scope

1.1 These test methods[2] cover measurement of the weight percentage of moisture, ash, and organic matter in peat materials, including moss, humus, and reed-sedge types.

1.2 *This standard may involve hazardous materials, operations, and equipment. This standard does not purport to address all of the safety problems associated with its use. It is the responsibility of whoever uses this standard to consult and establish appropriate safety and health practices and determine the applicability of regulatory limitations prior to use.*

2. Summary of Methods

2.1 *Method I*—Moisture is determined by drying a peat sample at 105°C. The loss in weight represents the total moisture content expressed as percentage by weight of the as-received sample.

2.2 *Method II*—This is an alternative moisture method which removes the total moisture in two steps: (*1*) evaporation of moisture by air at room temperature (air-drying) and (*2*) the subsequent loss in weight of the air-dried sample at 105°C. This method provides a more stable sample, the air-dried sample, when tests for nitrogen, pH, cation exchange, sand content, etc., are to be made.

2.3 Ash content of a peat sample is determined by igniting the oven-dried sample from the total moisture determination in a muffle furnance at 550°C. The substance remaining after ignition is the ash, and this includes mineral impurities such as sand. The ash content is expressed as a weight percentage of the oven-dried sample.

2.4 Organic matter is determined by difference.

3. Apparatus

3.1 *Oven*, regulated to a constant temperature of 105 ± 5°C.

3.2 *Muffle Furnace*, regulated to a constant temperature of 550°C.

3.3 *Evaporating Dishes*, high silica or porcelain, not less than 75-mL capacity.

3.4 *Blender*, high-speed.

3.5 *Aluminum Foil*, heavy-duty.

3.6 *Porcelain pan, spoons, etc.*

4. Preparation of Sample

4.1 Place a representative field sample on a square rubber sheet, paper, or oil cloth. Reduce the sample to the quantity required by quartering and place in a moistureproof container. *Work rapidly to prevent moisture losses.*

MOISTURE

5. Procedure—Method I

5.1 Mix the sample thoroughly and place a test specimen of at least 50 g in an ignited and weighed (with fitted heavy-duty aluminum foil cover) high silica or porcelain evaporating dish of not less than 100 mL capacity. Crush soft lumps with a spoon or spatula. Cover immediately with the aluminum foil and weigh to the nearest 0.01 g. Dry uncovered for 16 h at 105°C. Remove from the oven, cover tightly, cool, and weigh.

[1] These test methods are under the jurisdiction of ASTM Committee D-18 on Soil and Rock and are the direct responsibility of Subcommittee D18.18 on Peats and Related Materials.

Current edition approved Oct. 26, 1984. Published December 1984. Originally published as D 2974 – 71. Last previous edition D 2974 – 71.

[2] These test methods are currently undergoing an extensive review by Committee D-18.

AR301333

6. Calculation

6.1 Calculate the moisture content as follows:

$$\text{Moisture, \%} = [(A - B) \times 100]/A$$

where:

A = grams of as-received test specimen, and
B = grams of oven-dried test specimen.

NOTE—In geotechnical engineering the moisture content is commonly expressed as a proportion of the oven-dried mass. Care must be taken to indicate which system is being used.

7. Procedure—Method II

7.1 Use Method II when pH, nitrogen, sand content, cation exchange capacity, etc., are to be tested. Mix thoroughly and weigh a 100 to 300-g representative sample and spread evenly on a large flat pan. Crush soft lumps with a spoon or spatula and let the sample come to moisture equilibrium with room air, not less than 24 h. Stir occasionally to maintain maximum air exposure of the entire sample. When the weight is constant, calculate the loss in weight as percent moisture removed by air drying. Grind a representative portion of the air-dried sample 1 to 2 min in a high-speed blender. Use the ground portion for moisture, ash, nitrogen, etc., determinations.

7.2 Thoroughly mix the air-dried, ground sample and weigh to the nearest 0.01 g the equivalent of 50 g of test specimen on the as-received basis. Determine the grams of air-dried sample equivalent to 50 g of as-received sample as follows:

$$\text{Equivalent sample weight, g} = 50.0 - [(50 \times \text{percent moisture removed in air drying})/100]$$

Place the weighed sample in an ignited and weighed (with fitted heavy-duty aluminum foil cover) high silica or porcelain evaporating dish and proceed as in Method I.

8. Calculation

8.1 Calculate the moisture content as follows:

$$\text{Moisture, \%} = (50 - B) \times 2$$

where:

B = grams of oven-dried sample.

ASH

9. Procedure

9.1 Place an uncovered (retain cover for weighing) high silica or porcelain dish containing the dried test specimen from the moisture determinations in a muffle furnace. Gradually bring to 550°C and hold until completely ashed. Cover with the retained aluminum foil cover, cool, and weigh.

10. Calculation

10.1 Calculate the ash content as follows:

$$\text{Ash, \%} = (C \times 100)/B$$

where:

C = grams of ash, and
B = grams of oven-dried test specimen.

ORGANIC MATTER

11. Procedure

11.1 Determine the amount of organic matter by difference, as follows:

$$\text{Organic matter, \%} = 100.0 - D$$

where:

D = weight percentage of ash.

REPORT

12. Report

12.1 Report all results to the nearest 0.1 %.

12.2 Indicate whether moisture contents are by proportion of as-received mass or oven-dried mass.

13. Precision and Bias

13.1 The precision and bias of these test methods have not been determined. Data are being sought for use in developing a precision and bias statement.

The American Society for Testing and Materials takes no position respecting the validity of any patent rights asserted in connection with any item mentioned in this standard. Users of this standard are expressly advised that determination of the validity of any such patent rights, and the risk of infringement of such rights, are entirely their own responsibility.

This standard is subject to revision at any time by the responsible technical committee and must be reviewed every five years and if not revised, either reapproved or withdrawn. Your comments are invited either for revision of this standard or for additional standards and should be addressed to ASTM Headquarters. Your comments will receive careful consideration at a meeting of the responsible technical committee, which you may attend. If you feel that your comments have not received a fair hearing you should make your views known to the ASTM Committee on Standards, 1916 Race St., Philadelphia, Pa. 19103.

Standard Test Meth-
SAND CONTENT

This test method covers determin-
peat.

Formerly under the jurisdiction-
This test method was withdrawn

AR301334

Designation: D 422 – 63 (Reapproved 1972)[ε1]

Standard Method for Particle-Size Analysis of Soils[1]

This standard is issued under the fixed designation D 422; the number immediately following the designation indicates the year of original adoption or, in the case of revision, the year of last revision. A number in parentheses indicates the year of last reapproval. A superscript epsilon (ε) indicates an editorial change since the last revision or reapproval.

[ε1] NOTE—Section 2 was added editorially and subsequent sections renumbered in July 1984.

1. Scope

1.1 This method covers the quantitative determination of the distribution of particle sizes in soils. The distribution of particle sizes larger than 75 μm (retained on the No. 200 sieve) is determined by sieving, while the distribution of particle sizes smaller than 75 μm is determined by a sedimentation process, using a hydrometer to secure the necessary data (Notes 1 and 2).

NOTE 1—Separation may be made on the No. 4 (4.75-mm), No. 40 (425-μm), or No. 200 (75-μm) sieve instead of the No. 10. For whatever sieve used, the size shall be indicated in the report.

NOTE 2—Two types of dispersion devices are provided: (*1*) a high-speed mechanical stirrer, and (*2*) air dispersion. Extensive investigations indicate that air-dispersion devices produce a more positive dispersion of plastic soils below the 20-μm size and appreciably less degradation on all sizes when used with sandy soils. Because of the definite advantages favoring air dispersion, its use is recommended. The results from the two types of devices differ in magnitude, depending upon soil type, leading to marked differences in particle size distribution, especially for sizes finer than 20 μm.

2. Referenced Documents

2.1 *ASTM Standards:*

D 421 Practice for Dry Preparation of Soil Samples for Particle-Size Analysis and Determination of Soil Constants[2]

E 11 Specification for Wire-Cloth Sieves for Testing Purposes[3]

E 100 Specification for ASTM Hydrometers[4]

3. Apparatus

3.1 *Balances*—A balance sensitive to 0.01 g for weighing the material passing a No. 10 (2.00-mm) sieve, and a balance sensitive to 0.1 % of the mass of the sample to be weighed for weighing the material retained on a No. 10 sieve.

3.2 *Stirring Apparatus*—Either apparatus A or B may be used.

3.2.1 Apparatus A shall consist of a mechanically operated stirring device in which a suitably mounted electric motor turns a vertical shaft at a speed of not less than 10 000 rpm without load. The shaft shall be equipped with a replaceable stirring paddle made of metal, plastic, or hard rubber, as shown in Fig. 1. The shaft shall be of such length that the stirring paddle will operate not less than ¾ in. (19.0 mm) nor more than 1½ in. (38.1 mm) above the bottom of the dispersion cup. A special dispersion cup conforming to either of the designs shown in Fig. 2 shall be provided to hold the sample while it is being dispersed.

3.2.2 Apparatus B shall consist of an air-jet dispersion cup[5] (Note 3) conforming to the general details shown in Fig. 3 (Notes 4 and 5).

NOTE 3—The amount of air required by an air-jet dispersion cup is of the order of 2 ft^3/min; some small air compressors are not capable of supplying sufficient air to operate a cup.

NOTE 4—Another air-type dispersion device, known as a dispersion tube, developed by Chu and Davidson at Iowa State College, has been shown to give results equivalent to those secured by the air-jet dispersion cups. When it is used, soaking of the sample can be done in the sedimentation cylinder, thus eliminating the need for transferring the slurry. When the air-dispersion tube is used, it shall be so indicated in the report.

NOTE 5—Water may condense in air lines when not in use. This water must be removed, either by using a water trap on the air line, or by blowing the water out of the line before using any of the air for dispersion purposes.

3.3 *Hydrometer*—An ASTM hydrometer, graduated to read in either specific gravity of the suspension or grams per litre of suspension, and conforming to the requirements for hydrometers 151H or 152H in Specifications E 100. Dimensions of both hydrometers are the same, the scale being the only item of difference.

3.4 *Sedimentation Cylinder*—A glass cylinder essentially 18 in. (457 mm) in height and 2½ in. (63.5 mm) in diameter, and marked for a volume of 1000 mL. The inside diameter shall be such that the 1000-mL mark is 36 ± 2 cm from the bottom on the inside.

3.5 *Thermometer*—A thermometer accurate to 1°F (0.5°C).

3.6 *Sieves*—A series of sieves, of square-mesh woven-wire cloth, conforming to the requirements of Specification E 11. A full set of sieves includes the following (Note 6):

[1] This method is under the jurisdiction of ASTM Committee D-18 on Soil and Rock and is the direct responsibility of Subcommittee D18.03 on Texture, Plasticity, and Density Characteristics of Soils.

Current edition approved Nov. 21, 1963. Originally published 1935. Replaces D 422 – 62.

[2] *Annual Book of ASTM Standards*, Vol 04.08.

[3] *Annual Book of ASTM Standards*, Vol 14.02.

[4] *Annual Book of ASTM Standards*, Vol 14.01.

[5] Detailed working drawings for this cup are available at a nominal cost from the American Society for Testing and Materials, 1916 Race St, Philadelphia, PA 19103. Order Adjunct No. 12-404220-00.

AR301335

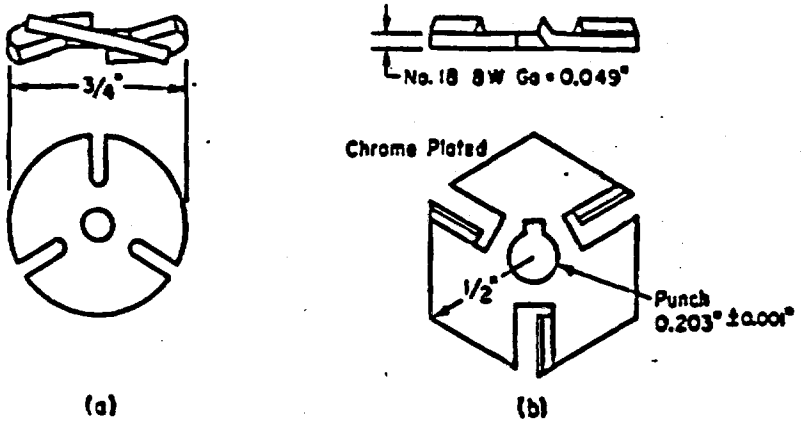

Metric Equivalents

in.	0.001	0.049	0.203	1/2	3/4
mm	0.03	1.24	5.16	12.7	19.0

FIG. 1 Detail of Stirring Paddles

3-in. (75-mm)	No. 10 (2.00-mm)
2-in. (50-mm)	No. 20 (850-µm)
1½-in. (37.5-mm)	No. 40 (425-µm)
1-in. (25.0-mm)	No. 60 (250-µm)
¾-in. (19.0-mm)	No. 140 (106-µm)
⅜-in. (9.5-mm)	No. 200 (75-µm)
No. 4 (4.75-mm)	

NOTE 6—A set of sieves giving uniform spacing of points for the graph, as required in Section 17, may be used if desired. This set consists of the following sieves:

3-in. (75-mm)	No. 16 (1.18-mm)
1½-in. (37.5-mm)	No. 30 (600-µm)
¾-in. (19.0-mm)	No. 50 (300-µm)
⅜-in. (9.5-mm)	No. 100 (150-µm)
No. 4 (4.75-mm)	No. 200 (75-µm)
No. 8 (2.36-mm)	

3.7 *Water Bath or Constant-Temperature Room*—A water bath or constant-temperature room for maintaining the soil suspension at a constant temperature during the hydrometer analysis. A satisfactory water tank is an insulated tank that maintains the temperature of the suspension at a convenient constant temperature at or near 68°F (20°C). Such a device is illustrated in Fig. 4. In cases where the work is performed in a room at an automatically controlled constant temperature, the water bath is not necessary.

3.8 *Beaker*—A beaker of 250-mL capacity.

3.9 *Timing Device*—A watch or clock with a second hand.

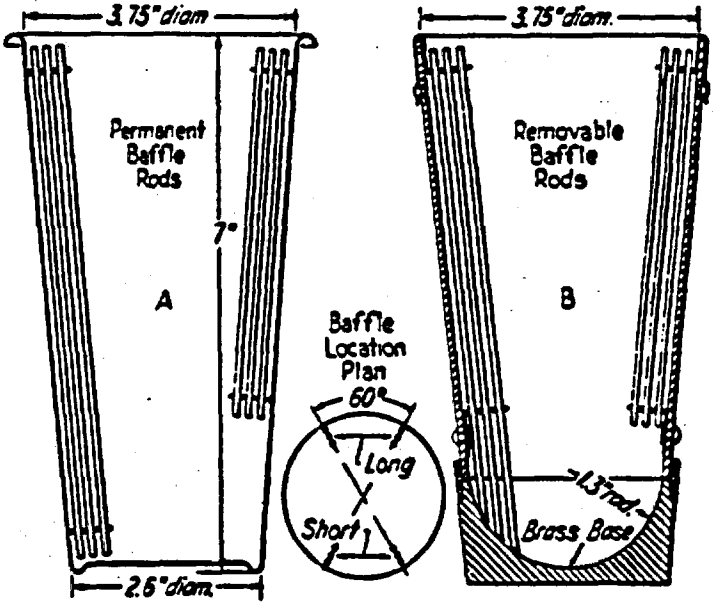

Metric Equivalents

in.	1.3	2.6	3.75
mm	33	66	95.2

FIG. 2 Dispersion Cups of Apparatus

Dispersing Agent

4.1 A solution of sodium hexametaphosphate (sometimes called sodium metaphosphate) shall be used in distilled or demineralized water, at the rate of 40 g of sodium hexametaphosphate/litre of solution (Note 7).

NOTE 7—Solutions of this salt, if acidic, slowly revert or hydrolyze back to the orthophosphate form with a resultant decrease in dispersive action. Solutions should be prepared frequently (at least once a month) or adjusted to pH of 8 or 9 by means of sodium carbonate. Bottles containing solutions should have the date of preparation marked on them.

4.2 All water used shall be either distilled or demineralized water. The water for a hydrometer test shall be brought to the temperature that is expected to prevail during the hydrometer test. For example, if the sedimentation cylinder is to be placed in the water bath, the distilled or demineralized water to be used shall be brought to the temperature of the controlled water bath; or, if the sedimentation cylinder is used in a room with controlled temperature, the water for the test shall be at the temperature of the room. The basic temperature for the hydrometer test is 68°F (20°C). Small variations of temperature do not introduce differences that are of practical significance and do not prevent the use of corrections derived as prescribed.

AR301396

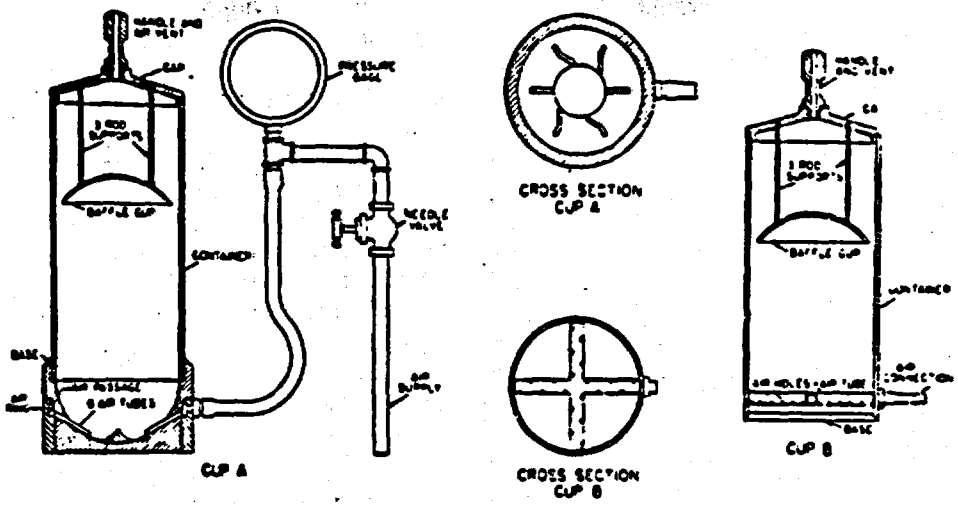

FIG. 3 Air-Jet Dispersion Cups of Apparatus B

5. Test Sample

5.1 Prepare the test sample for mechanical analysis as outlined in Practice D 421. During the preparation procedure the sample is divided into two portions. One portion contains only particles retained on the No. 10 (2.00-mm) sieve while the other portion contains only particles passing the No. 10 sieve. The mass of air-dried soil selected for purpose of tests, as prescribed in Practice D 421, shall be sufficient to yield quantities for mechanical analysis as follows:

5.1.1 The size of the portion retained on the No. 10 sieve shall depend on the maximum size of particle, according to the following schedule:

Nominal Diameter of Largest Particles, in. (mm)	Approximate Minimum Mass of Portion, g
⅜ (9.5)	500
¾ (19.0)	1000
1 (25.4)	2000
1½ (38.1)	3000
2 (50.8)	4000
3 (76.2)	5000

5.1.2 The size of the portion passing the No. 10 sieve shall be approximately 115 g for sandy soils and approximately 65 g for silt and clay soils.

5.2 Provision is made in Section 5 of Practice D 421 for weighing of the air-dry soil selected for purpose of tests, the separation of the soil on the No. 10 sieve by dry-sieving and washing, and the weighing of the washed and dried fraction retained on the No. 10 sieve. From these two masses the percentages retained and passing the No. 10 sieve can be calculated in accordance with 12.1.

NOTE 8—A check on the mass values and the thoroughness of pulverization of the clods may be secured by weighing the portion passing the No. 10 sieve and adding this value to the mass of the washed and oven-dried portion retained on the No. 10 sieve.

SIEVE ANALYSIS OF PORTION RETAINED ON NO. 10 (2.00-mm) SIEVE

6. Procedure

6.1 Separate the portion retained on the No. 10 (2.00-mm) sieve into a series of fractions using the 3-in. (75-mm), 2-in. (50-mm), 1½-in. (37.5-mm), 1-in. (25.0-mm), ¾-in. (19.0-mm), ⅜-in. (9.5-mm), No. 4 (4.75-mm), and No. 10 sieves, or as many as may be needed depending on the sample, or upon the specifications for the material under test.

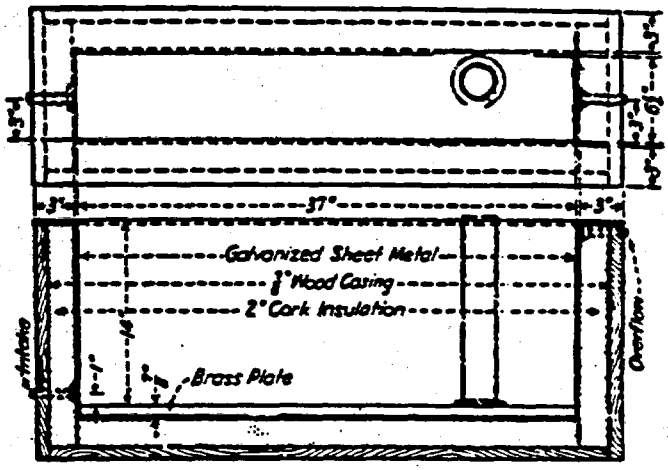

Metric Equivalents

in.	⅞	1	3	6¼	14	37
mm	22.2	25.4	76.2	158.2	356	940

FIG. 4 Insulated Water Bath

6.2 Conduct the sieving operation by means of a lateral and vertical motion of the sieve, accompanied by a jarring action in order to keep the sample moving continuously over the surface of the sieve. In no case turn or manipulate fragments in the sample through the sieve by hand. Continue sieving until not more than 1 mass % of the residue on a sieve passes that sieve during 1 min of sieving. When mechanical sieving is used, test the thoroughness of sieving by using the hand method of sieving as described above.

6.3 Determine the mass of each fraction on a balance conforming to the requirements of 3.1. At the end of weighing, the sum of the masses retained on all the sieves used should equal closely the original mass of the quantity sieved.

AR301337

HYDROMETER AND SIEVE ANALYSIS OF PORTION PASSING THE NO. 10 (2.00-mm) SIEVE

Determination of Composite Correction for Hydrometer Reading

7.1 Equations for percentages of soil remaining in suspension, as given in 14.3, are based on the use of distilled or demineralized water. A dispersing agent is used in the water, however, and the specific gravity of the resulting liquid is appreciably greater than that of distilled or demineralized water.

7.1.1 Both soil hydrometers are calibrated at 68°F (20°C), and variations in temperature from this standard temperature produce inaccuracies in the actual hydrometer readings. The amount of the inaccuracy increases as the variation from the standard temperature increases.

7.1.2 Hydrometers are graduated by the manufacturer to be read at the bottom of the meniscus formed by the liquid on the stem. Since it is not possible to secure readings of soil suspensions at the bottom of the meniscus, readings must be taken at the top and a correction applied.

7.1.3 The net amount of the corrections for the three items enumerated is designated as the composite correction, and may be determined experimentally.

7.2 For convenience, a graph or table of composite corrections for a series of 1° temperature differences for the range of expected test temperatures may be prepared and used as needed. Measurement of the composite corrections may be made at two temperatures spanning the range of expected test temperatures, and corrections for the intermediate temperatures calculated assuming a straight-line relationship between the two observed values.

7.3 Prepare 1000 mL of liquid composed of distilled or demineralized water and dispersing agent in the same proportion as will prevail in the sedimentation (hydrometer) test. Place the liquid in a sedimentation cyclinder and the cylinder in the constant-temperature water bath, set for one of the two temperatures to be used. When the temperature of the liquid becomes constant, insert the hydrometer, and, after a short interval to permit the hydrometer to come to the temperature of the liquid, read the hydrometer at the top of the meniscus formed on the stem. For hydrometer 151H the composite correction is the difference between this reading and one; for hydrometer 152H it is the difference between the reading and zero. Bring the liquid and the hydrometer to the other temperature to be used, and secure the composite correction as before.

8. Hygroscopic Moisture

8.1 When the sample is weighed for the hydrometer test, weigh out an auxiliary portion of from 10 to 15 g in a small metal or glass container, dry the sample to a constant mass in an oven at 230 ± 9°F (110 ± 5°C), and weigh again. Record the masses.

9. Dispersion of Soil Sample

9.1 When the soil is mostly of the clay and silt sizes, weigh out a sample of air-dry soil of approximately 50 g. When the soil is mostly sand the sample should be approximately 100 g.

9.2 Place the sample in the 250-mL beaker and cover with 125 mL of sodium hexametaphosphate solution (40 g/L). Stir until the soil is thoroughly wetted. Allow to soak for at least 16 h.

9.3 At the end of the soaking period, disperse the sample further, using either stirring apparatus A or B. If stirring apparatus A is used, transfer the soil - water slurry from the beaker into the special dispersion cup shown in Fig. 2, washing any residue from the beaker into the cup with distilled or demineralized water (Note 9). Add distilled or demineralized water, if necessary, so that the cup is more than half full. Stir for a period of 1 min.

NOTE 9—A large size syringe is a convenient device for handling the water in the washing operation. Other devices include the wash-water bottle and a hose with nozzle connected to a pressurized distilled water tank.

9.4 If stirring apparatus B (Fig. 3) is used, remove the cover cap and connect the cup to a compressed air supply by means of a rubber hose. A air gage must be on the line between the cup and the control valve. Open the control valve so that the gage indicates 1 psi (7 kPa) pressure (Note 10). Transfer the soil - water slurry from the beaker to the air-jet dispersion cup by washing with distilled or demineralized water. Add distilled or demineralized water, if necessary, so that the total volume in the cup is 250 mL, but no more.

NOTE 10—The initial air pressure of 1 psi is required to prevent the soil - water mixture from entering the air-jet chamber when the mixture is transferred to the dispersion cup.

9.5 Place the cover cap on the cup and open the air control valve until the gage pressure is 20 psi (140 kPa). Disperse the soil according to the following schedule:

Plasticity Index	Dispersion Period, min
Under 5	5
6 to 20	10
Over 20	15

Soils containing large percentages of mica need be dispersed for only 1 min. After the dispersion period, reduce the gage pressure to 1 psi preparatory to transfer of soil - water slurry to the sedimentation cylinder.

10. Hydrometer Test

10.1 Immediately after dispersion, transfer the soil - water slurry to the glass sedimentation cylinder, and add distilled or demineralized water until the total volume is 1000 mL.

10.2 Using the palm of the hand over the open end of the cylinder (or a rubber stopper in the open end), turn the cylinder upside down and back for a period of 1 min to complete the agitation of the slurry (Note 11). At the end of 1 min set the cylinder in a convenient location and take hydrometer readings at the following intervals of time (measured from the beginning of sedimentation), or as many as may be needed, depending on the sample or the specification for the material under test: 2, 5, 15, 30, 60, 250, and 1440 min. If the controlled water bath is used, the sedimentation cylinder should be placed in the bath between the 2- and 5-min readings.

NOTE 11—The number of turns during this minute should be approximately 60, counting the turn upside down and back as two turns

AR 301338

Any soil remaining in the bottom of the cylinder during the first few turns should be loosened by vigorous shaking of the cylinder while it is in the inverted position.

10.3 When it is desired to take a hydrometer reading, carefully insert the hydrometer about 20 to 25 s before the reading is due to approximately the depth it will have when the reading is taken. As soon as the reading is taken, carefully remove the hydrometer and place it with a spinning motion in a graduate of clean distilled or demineralized water.

NOTE 12—It is important to remove the hydrometer immediately after each reading. Readings shall be taken at the top of the meniscus formed by the suspension around the stem, since it is not possible to secure readings at the bottom of the meniscus.

10.4 After each reading, take the temperature of the suspension by inserting the thermometer into the suspension.

11. Sieve Analysis

11.1 After taking the final hydrometer reading, transfer the suspension to a No. 200 (75-μm) sieve and wash with tap water until the wash water is clear. Transfer the material on the No. 200 sieve to a suitable container, dry in an oven at 230 ± 9°F (110 ± 5°C) and make a sieve analysis of the portion retained, using as many sieves as desired, or required for the material, or upon the specification of the material under test.

CALCULATIONS AND REPORT

12. Sieve Analysis Values for the Portion Coarser than the No. 10 (2.00-mm) Sieve

12.1 Calculate the percentage passing the No. 10 sieve by dividing the mass passing the No. 10 sieve by the mass of soil originally split on the No. 10 sieve, and multiplying the result by 100. To obtain the mass passing the No. 10 sieve, subtract the mass retained on the No. 10 sieve from the original mass.

12.2 To secure the total mass of soil passing the No. 4 (4.75-mm) sieve, add to the mass of the material passing the No. 10 sieve the mass of the fraction passing the No. 4 sieve and retained on the No. 10 sieve. To secure the total mass of soil passing the ⅜-in. (9.5-mm) sieve, add to the total mass of soil passing the No. 4 sieve, the mass of the fraction passing the ⅜-in. sieve and retained on the No. 4 sieve. For the remaining sieves, continue the calculations in the same manner.

12.3 To determine the total percentage passing for each sieve, divide the total mass passing (see 12.2) by the total mass of sample and multiply the result by 100.

13. Hygroscopic Moisture Correction Factor

13.1 The hydroscopic moisture correction factor is the ratio between the mass of the oven-dried sample and the air-dry mass before drying. It is a number less than one, except when there is no hygroscopic moisture.

14. Percentages of Soil in Suspension

14.1 Calculate the oven-dry mass of soil used in the hydrometer analysis by multiplying the air-dry mass by the hygroscopic moisture correction factor.

TABLE 1 Values of Correction Factor, *a*, for Different Specific Gravities of Soil Particles[A]

Specific Gravity	Correction Factor[A]
2.95	0.94
2.90	0.95
2.85	0.96
2.80	0.97
2.75	0.98
2.70	0.99
2.65	1.00
2.60	1.01
2.55	1.02
2.50	1.03
2.45	1.05

[A] For use in equation for percentage of soil remaining in suspension when using Hydrometer 152H.

14.2 Calculate the mass of a total sample represented by the mass of soil used in the hydrometer test, by dividing the oven-dry mass used by the percentage passing the No. 10 (2.00-mm) sieve, and multiplying the result by 100. This value is the weight W in the equation for percentage remaining in suspension.

14.3 The percentage of soil remaining in suspension at the level at which the hydrometer is measuring the density of the suspension may be calculated as follows (Note 13): For hydrometer 151H:

$$P = [(100\,000/W) \times G/(G - G_1)](R - G_1)$$

NOTE 13—The bracketed portion of the equation for hydrometer 151H is constant for a series of readings and may be calculated first and then multiplied by the portion in the parentheses.

For hydrometer 152H:

$$P = (Ra/W) \times 100$$

where:

a = correction faction to be applied to the reading of hydrometer 152H. (Values shown on the scale are computed using a specific gravity of 2.65. Correction factors are given in Table 1),

P = percentage of soil remaining in suspension at the level at which the hydrometer measures the density of the suspension,

R = hydrometer reading with composite correction applied (Section 7),

W = oven-dry mass of soil in a total test sample represented by mass of soil dispersed (see 14.2), g,

G = specific gravity of the soil particles, and

G_1 = specific gravity of the liquid in which soil particles are suspended. Use numerical value of one in both instances in the equation. In the first instance any possible variation produces no significant effect, and in the second instance, the composite correction for R is based on a value of one for G_1.

15. Diameter of Soil Particles

15.1 The diameter of a particle corresponding to the percentage indicated by a given hydrometer reading shall be calculated according to Stokes' law (Note 14), on the basis that a particle of this diameter was at the surface of the suspension at the beginning of sedimentation and had settled to the level at which the hydrometer is measuring the density of the suspension. According to Stokes' law:

$$D = \sqrt{[30n/980(G - G_1)] \times L/T}$$

AR301339

where:

D = diameter of particle, mm,
= coefficient of viscosity of the suspending medium (in this case water) in poises (varies with changes in temperature of the suspending medium),
L = distance from the surface of the suspension to the level at which the density of the suspension is being measured, cm. (For a given hydrometer and sedimentation cylinder, values vary according to the hydrometer readings. This distance is known as effective depth (Table 2)),
T = interval of time from beginning of sedimentation to the taking of the reading, min,
G = specific gravity of soil particles, and
G_1 = specific gravity (relative density) of suspending medium (value may be used as 1.000 for all practical purposes).

NOTE 14—Since Stokes' law considers the terminal velocity of a single sphere falling in an infinity of liquid, the sizes calculated represent the diameter of spheres that would fall at the same rate as the soil particles.

15.2 For convenience in calculations the above equation may be written as follows:

$$D = K\sqrt{L/T}$$

where:

K = constant depending on the temperature of the suspension and the specific gravity of the soil particles. Values of K for a range of temperatures and specific gravities are given in Table 3. The value of K does not change for a series of readings constituting a test, while values of L and T do vary.

15.3 Values of D may be computed with sufficient accuracy, using an ordinary 10-in. slide rule.

NOTE 15—The value of L is divided by T using the A- and B-scales, the square root being indicated on the D-scale. Without ascertaining the value of the square root it may be multiplied by K, using either the C- or CI-scale.

16. Sieve Analysis Values for Portion Finer than No. 10 (2.00-mm) Sieve

16.1 Calculation of percentages passing the various sieves used in sieving the portion of the sample from the hydrometer test involves several steps. The first step is to calculate the mass of the fraction that would have been retained on the No. 10 sieve had it not been removed. This mass is equal to the total percentage retained on the No. 10 sieve (100 minus total percentage passing) times the mass of the total sample represented by the mass of soil used (as calculated in 14.2), and the result divided by 100.

16.2 Calculate next the total mass passing the No. 200 sieve. Add together the fractional masses retained on all the sieves, including the No. 10 sieve, and subtract this sum from the mass of the total sample (as calculated in 14.2).

16.3 Calculate next the total masses passing each of the other sieves, in a manner similar to that given in 12.2.

16.4 Calculate last the total percentages passing by dividing the total mass passing (as calculated in 16.3) by the total mass of sample (as calculated in 14.2), and multiply the result by 100.

TABLE 2 Values of Effective Depth Based on Hydrometer and Sedimentation Cylinder of Specified Sizes[A]

Hydrometer 151H		Hydrometer 152H			
Actual Hydrometer Reading	Effective Depth, L, cm	Actual Hydrometer Reading	Effective Depth, L, cm	Actual Hydrometer Reading	Effective Depth, L, cm
1.000	16.3	0	16.3	31	11.2
1.001	16.0	1	16.1	32	11.1
1.002	15.8	2	16.0	33	10.9
1.003	15.5	3	15.8	34	10.7
1.004	15.2	4	15.6	35	10.6
1.005	15.0	5	15.5		
1.006	14.7	6	15.3	36	10.4
1.007	14.4	7	15.2	37	10.2
1.008	14.2	8	15.0	38	10.1
1.009	13.9	9	14.8	39	9.9
1.010	13.7	10	14.7	40	9.7
1.011	13.4	11	14.5	41	9.6
1.012	13.1	12	14.3	42	9.4
1.013	12.9	13	14.2	43	9.2
1.014	12.6	14	14.0	44	9.1
1.015	12.3	15	13.8	45	8.9
1.016	12.1	16	13.7	46	8.8
1.017	11.8	17	13.5	47	8.6
1.018	11.5	18	13.3	48	8.4
1.019	11.3	19	13.2	49	8.3
1.020	11.0	20	13.0	50	8.1
1.021	10.7	21	12.9	51	7.9
1.022	10.5	22	12.7	52	7.8
1.023	10.2	23	12.5	53	7.6
1.024	10.0	24	12.4	54	7.4
1.025	9.7	25	12.2	55	7.3
1.026	9.4	26	12.0	56	7.1
1.027	9.2	27	11.9	57	7.0
1.028	8.9	28	11.7	58	6.8
1.029	8.6	29	11.5	59	6.6
1.030	8.4	30	11.4	60	6.5
1.031	8.1				
1.032	7.8				
1.033	7.6				
1.034	7.3				
1.035	7.0				
1.036	6.8				
1.037	6.5				
1.038	6.2				

[A] Values of effective depth are calculated from the equation:

$$L = L_1 + \tfrac{1}{2}[L_2 - (V_B/A)]$$

where:

L = effective depth, cm,
L_1 = distance along the stem of the hydrometer from the top of the bulb to the mark for a hydrometer reading, cm,
L_2 = overall length of the hydrometer bulb, cm,
V_B = volume of hydrometer bulb, cm^3, and
A = cross-sectional area of sedimentation cylinder, cm^2

Values used in calculating the values in Table 2 are as follows:

For both hydrometers, 151H and 152H:
L_2 = 14.0 cm
V_B = 67.0 cm^3
A = 27.8 cm^2

For hydrometer 151H:
L_1 = 10.5 cm for a reading of 1.000
= 2.3 cm for a reading of 1.031

For hydrometer 152H:
L_1 = 10.5 cm for a reading of 0 g/litre
= 2.3 cm for a reading of 50 g/litre

AR301340

17. Graph

17.1 When the hydrometer analysis is performed, a graph

TABLE 3 Values of K for Use in Equation for Computing Diameter of Particle in Hydrometer Analysis

Temperature, °C	Specific Gravity of Soil Particles								
	2.45	2.50	2.55	2.60	2.65	2.70	2.75	2.80	2.85
16	0.01510	0.01505	0.01481	0.01457	0.01435	0.01414	0.01394	0.01374	0.01356
17	0.01511	0.01486	0.01462	0.01439	0.01417	0.01396	0.01376	0.01356	0.01338
18	0.01492	0.01467	0.01443	0.01421	0.01399	0.01378	0.01359	0.01339	0.01321
19	0.01474	0.01449	0.01425	0.01403	0.01382	0.01361	0.01342	0.1323	0.01305
20	0.01456	0.01431	0.01408	0.01386	0.01365	0.01344	0.01325	0.01307	0.01289
21	0.01438	0.01414	0.01391	0.01369	0.01348	0.01328	0.01309	0.01291	0.01273
22	0.01421	0.01397	0.01374	0.01353	0.01332	0.01312	0.01294	0.01276	0.01258
23	0.01404	0.01381	0.01358	0.01337	0.01317	0.01297	0.01279	0.01261	0.01243
24	0.01388	0.01365	0.01342	0.01321	0.01301	0.01282	0.01264	0.01246	0.01229
25	0.01372	0.01349	0.01327	0.01306	0.01286	0.01267	0.01249	0.01232	0.01215
26	0.01357	0.01334	0.01312	0.01291	0.01272	0.01253	0.01235	0.01218	0.01201
27	0.01342	0.01319	0.01297	0.01277	0.01258	0.01239	0.01221	0.01204	0.01188
28	0.01327	0.01304	0.01283	0.01264	0.01244	0.01255	0.01208	0.01191	0.01175
29	0.01312	0.01290	0.01269	0.01249	0.01230	0.01212	0.01195	0.01178	0.01162
30	0.01298	0.01276	0.01256	0.01236	0.01217	0.01199	0.01182	0.01165	0.01149

of the test results shall be made, plotting the diameters of the particles on a logarithmic scale as the abscissa and the percentages smaller than the corresponding diameters to an arithmetic scale as the ordinate. When the hydrometer analysis is not made on a portion of the soil, the preparation of the graph is optional, since values may be secured directly from tabulated data.

18. Report

18.1 The report shall include the following:

18.1.1 Maximum size of particles,

18.1.2 Percentage passing (or retained on) each sieve, which may be tabulated or presented by plotting on a graph (Note 16),

18.1.3 Description of sand and gravel particles:

18.1.3.1 Shape—rounded or angular,

18.1.3.2 Hardness—hard and durable, soft, or weathered and friable,

18.1.4 Specific gravity, if unusually high or low,

18.1.5 Any difficulty in dispersing the fraction passing the No. 10 (2.00-mm) sieve, indicating any change in type and amount of dispersing agent, and

18.1.6 The dispersion device used and the length of the dispersion period.

NOTE 16—This tabulation of graph represents the gradation of the sample tested. If particles larger than those contained in the sample were removed before testing, the report shall so state giving the amount and maximum size.

18.2 For materials tested for compliance with definite specifications, the fractions called for in such specifications shall be reported. The fractions smaller than the No. 10 sieve shall be read from the graph.

18.3 For materials for which compliance with definite specifications is not indicated and when the soil is composed almost entirely of particles passing the No. 4 (4.75-mm) sieve, the results read from the graph may be reported as follows:

(1) Gravel, passing 3-in. and retained on No. 4 sieve ..... %
(2) Sand, passing No. 4 sieve and retained on No. 200 sieve ..... %
  (a) Coarse sand, passing No. 4 sieve and retained on No. 10 sieve ..... %
  (b) Medium sand, passing No. 10 sieve and retained on No. 40 sieve ..... %
  (c) Fine sand, passing No. 40 sieve and retained on No. 200 sieve ..... %
(3) Silt size, 0.074 to 0.005 mm ..... %
(4) Clay size, smaller than 0.005 mm ..... %
  Colloids, smaller than 0.001 mm ..... %

18.4 For materials for which compliance with definite specifications is not indicated and when the soil contains material retained on the No. 4 sieve sufficient to require a sieve analysis on that portion, the results may be reported as follows (Note 17):

SIEVE ANALYSIS

Sieve Size	Percentage Passing
3-in.	.....
2-in.	.....
1½-in.	.....
1-in.	.....
¾-in.	.....
⅜-in.	.....
No. 4 (4.75-mm)	.....
No. 10 (2.00-mm)	.....
No. 40 (425-μm)	.....
No. 200 (75-μm)	.....
HYDROMETER ANALYSIS	
0.074 mm	.....
0.005 mm	.....
0.001 mm	.....

NOTE 17—No. 8 (2.36-mm) and No. 50 (300-μm) sieves may be substituted for No. 10 and No. 40 sieves.

The American Society for Testing and Materials takes no position respecting the validity of any patent rights asserted in connection with any item mentioned in this standard. Users of this standard are expressly advised that determination of the validity of any such patent rights, and the risk of infringement of such rights, are entirely their own responsibility.

This standard is subject to revision at any time by the responsible technical committee and must be reviewed every five years and if not revised, either reapproved or withdrawn. Your comments are invited either for revision of this standard or for additional standards and should be addressed to ASTM Headquarters. Your comments will receive careful consideration at a meeting of the responsible technical committee, which you may attend. If you feel that your comments have not received a fair hearing you should make your views known to the ASTM Committee on Standards, 1916 Race St., Philadelphia, PA 19103.

AR301341

An American National Standard

Standard Method for Laboratory Determination of Water (Moisture) Content of Soil, Rock, and Soil-Aggregate Mixtures[1]

This standard is issued under the fixed designation D 2216; the number immediately following the designation indicates the year of original adoption or, in the case of revision, the year of last revision. A number in parentheses indicates the year of last reapproval. A superscript epsilon (ε) indicates an editorial change since the last revision or reapproval.

1. Scope

1.1 This method covers the laboratory determination of the water (moisture) content of soil, rock, and soil-aggregate mixtures by weight. For simplicity, the word "material" hereinafter refers to either soil, rock, or soil-aggregate mixtures, whichever is most applicable.

1.2 The water content of a material is defined as the ratio, expressed as a percentage, of the mass of "pore" or "free" water in a given mass of material to the mass of the solid material particles.

1.3 This method does not give true representative results for: materials containing significant amounts of halloysite, montmorillonite, or gypsum minerals; highly organic soils; or, materials in which the pore water contains dissolved solids (such as salt in the case of marine deposits). For a material of the previously mentioned types, a modified method of [illegible]; or data calculation may be established to give results consistent with the purpose of the test.

2. Summary of Method

2.1 The practical application in determining the water content of a material is to determine the mass of water removed by drying the moist material (test specimen) to a constant mass in a drying oven controlled at 110 ± 5°C and to use this value as the mass of water in the test specimen. The mass of material remaining after oven-drying is used as the mass of the solid particles.

3. Significance and Use

3.1 For many soil types, the water content is one of the most significant index properties used in establishing a correlation between soil behavior and an index property.

3.2 The water content of a soil is used in almost every equation expressing the phase relationships of air, water, and solids in a given volume of material.

3.3 In fine-grained (cohesive) soils, the consistency of a given soil type depends on its water content. The water content of a soil, along with its liquid and plastic limit, is used to express its relative consistency or liquidity index.

3.4 The term "water" as used in geotechnical engineering is typically assumed to be "pore" or "free" water and not that which is hydrated to the mineral surfaces. Therefore, the water content of materials containing significant amounts of hydrated water at in-situ temperatures or less than 110°C can be misleading.

3.5 The term "solid particles" as used in geotechnical engineering, is typically assumed to mean naturally occurring mineral particles that are not readily soluble in water. Therefore, the water content of materials containing extraneous matter (such as cement, etc), water-soluble matter (such as salt) and highly organic matter typically require special treatment or a qualified definition of water content.

4. Apparatus

4.1 *Drying Oven*, thermostatically-controlled, preferably of the forced-draft type, and maintaining a uniform temperature of 110 ± 5°C throughout the drying chamber.

4.2 *Balances*, having a precision (repeatability) of ±0.01 g for specimens having a mass of 200 g or less, ±0.1 g for specimens having a mass of between 200 and 1000 g, or ±1 g for specimens having a mass greater than 1000 g.

4.3 *Specimen Containers*—Suitable containers made of material resistant to corrosion and a change in mass upon repeated heating, cooling, and cleaning. Containers with close-fitting lids shall be used for testing specimens having a mass of less than about 200 g; while for specimens having a mass greater than about 200 g, containers without lids may be used (Note 1). One container is needed for each water content determination.

NOTE 1—The purpose of close-fitting lids is to prevent loss of moisture from specimens before initial weighing and to prevent absorption of moisture from the atmosphere following drying and before final weighing.

4.4 *Desiccator*—A desiccator of suitable size (a convenient size is 200 to 250-mm diameter) containing a hydrous silica gel. This equipment is only recommended for use when containers having close-fitting lids are not used. See 7.4.1.

5. Samples

5.1 Keep the samples that are stored prior to testing in noncorrodible airtight containers at a temperature between approximately 3 and 30°C and in an area that prevents direct contact with sunlight.

5.2 The water content determination should be done

[1] This method is under the jurisdiction of ASTM Committee D-18 on Soil and Rock and is the direct responsibility of Subcommittee D18.03 on Texture, Plasticity and Density Characteristics of Soils.

Current edition approved May 30, 1980. Published July 1980. Originally published as D 2216 – 63 T. Last previous edition D 2216 – 71.

AR301342

soon as practicable after sampling, especially if potentially corrodible containers (such as steel thin-walled tubes, paint cans, etc.) or sample bags are used.

6. Test Specimen

6.1 For water contents being determined in conjunction with another ASTM method, the method of specimen selection specified in that method controls.

6.2 The manner in which the test specimen is selected and its required mass is basically dependent on the purpose (application) of the test, type of material being tested, and the type of sample (specimen from another test, bag, tube, split-barrel, etc.). In all cases, however, a representative portion of the total sample shall be selected. If a layered soil or more than one soil type is encountered, select an average portion or individual portions or both, and note which portion(s) was tested in the report of the results.

6.2.1 For bulk samples, select the test specimen from the material after it has been thoroughly mixed. The mass of moist material selected shall be in accordance with the following table:

Sieve Retaining More Than About 10 % of Sample	Recommended Minimum Mass of Moist Specimen, g
2.0 mm (No. 10) sieve	100 to 200
4.75 mm (No. 4) sieve	300 to 500
19 mm	500 to 1000
38 mm	1500 to 3000
76 mm	5000 to 10 000

6.2.2 For small (jar) samples, select a representative portion in accordance with the following procedure:

6.2.2.1 For cohesionless soils, thoroughly mix the material, then select a test specimen having a mass of moist material in accordance with the table in 6.2.1. See Note 2.

6.2.2.2 For cohesive soils, remove about 3 mm of material from the exposed periphery of the sample and slice it in half (to check if the material is layered) prior to selecting the test specimen. If the soil is layered see 6.2. The mass of moist material selected should not be less than 25 g or should be in accordance with the table in 6.2.1 if coarse-grained particles are noted. (Note 2).

6.3 Using a test specimen smaller than the minimum mass indicated previously requires discretion, though it may be adequate for the purpose of the test. A specimen having a mass less than the previously indicated value shall be noted in the report of the results.

NOTE 2—In many cases, when working with a small sample containing a relatively large coarse-grained particle, it is appropriate not to include this particle in the test specimen. If this occurs, it should be noted in the report of the results.

7. Procedure

7.1 Select representative test specimens in accordance with Section 6.

7.2 Place the moist specimen in a clean, dry container of known mass (Note 3), set the lid securely in position, and determine the mass of the container and moist material using an appropriate balance (4.2). Record these values.

7.3 Remove the lid and place the container with moist material in a drying oven maintained at 110 ± 5°C and dry to a constant mass (Notes 4, 5, and 6).

NOTE 3—To assist in the oven-drying of large test specimens, they should be placed in containers having a large surface area (such as pans) and the material broken up into smaller aggregations.

NOTE 4—The time required to obtain constant mass will vary depending on the type of material, size of specimen, oven type and capacity, and other factors. The influence of these factors generally can be established by good judgment, and experience with the materials being tested and the apparatus being used. In most cases, drying a test specimen over night (about 16 h) is sufficient. In cases where there is doubt concerning the adequacy of drying, drying should be continued until the mass after two successive periods (greater than ½ h) of drying indicate an insignificant change (less than about 0.1 %). Specimens of sand may often be dried to constant mass in a period of about 4 h, when a forced-draft oven is used.

NOTE 5—Oven-drying at 110 ± 5°C does not always result in water content values related to the intended use or the basic definition especially for materials containing gypsum or other minerals having significant amounts of hydrated water or for soil containing a significant amount of organic material. In many cases, and depending on the intended use for these types of materials, it might be more applicable to maintain the drying oven at 60 ± 5°C or use a vacuum desiccator at a vacuum of approximately 133 Pa (10 mm Hg) and at a temperature ranging between 23 and 60°C for drying. If either of these drying methods are used, it should be noted in the report of the results.

NOTE 6—Since some dry materials may absorb moisture from moist specimens, dried specimens should be removed before placing moist specimens in the oven. However, this requirement is not applicable if the previously dried specimens will remain in the drying oven for an additional time period of about 16 h.

7.4 After the material has dried to constant mass remove the container from the oven and replace the lid. Allow the material and container to cool to room temperature or until the container can be handled comfortably with bare hands and the operation of the balance will not be affected by convection currents. Determine the mass of the container and oven-dried material using the same balance as used in 7.2. Record this value.

7.4.1 If the container does not have a lid, weigh the container and material right after their temperatures are such that the operation of the balance will not be affected by convection currents or after cooling in a desiccator.

NOTE 7—Cooling in a desiccator is recommended since it prevents absorption of moisture from the atmosphere during cooling.

8. Calculation

8.1 Calculate the water content of the material as follows:

$$w = [(W_1 - W_2)/(W_2 - W_c)] \times 100 = \frac{W_w}{W_s} \times 100$$

where:

w = water content, %,
W_1 = mass of container and moist specimen, g,
W_2 = mass of container and oven-dried specimen, g,
W_c = mass of container, g,
W_w = mass of water, g, and
W_s = mass of solid particles, g.

9. Report

9.1 The report (data sheet) shall include the following:

9.1.1 Identification of the sample (material) being tested, by boring number, sample number, test number, etc.

9.1.2 Water content of the specimen to the nearest 0.1 % or 1 %, depending on the purpose of the test.

AR 301343

9.1.3 Indication of test specimen having a mass less than the minimum indicated in Section 6.

9.1.4 Indication of test specimen containing more than [illegible] soil type (layered, etc).

[illegible] Indication of the method of drying if different from [illegible]ven-drying at 110 ± 5°C.

9.1.6 Indication of any material (size and amount) excluded from the test specimen.

10. Precision and Accuracy

10.1 Requirements for the precision and accuracy of this test method have not yet been developed.

The American Society for Testing and Materials takes no position respecting the validity of any patent rights asserted in connection with any item mentioned in this standard. Users of this standard are expressly advised that determination of the validity of any such patent rights, and the risk of infringement of such rights, are entirely their own responsibility.

This standard is subject to revision at any time by the responsible technical committee and must be reviewed every five years and if not revised, either reapproved or withdrawn. Your comments are invited either for revision of this standard or for additional standards and should be addressed to ASTM Headquarters. Your comments will receive careful consideration at a meeting of the responsible technical committee, which you may attend. If you feel that your comments have not received a fair hearing you should make your views known to the ASTM Committee on Standards, 1916 Race St., Philadelphia, PA 19103.

AR301344

Nitrate & Nitrite

Procedure for Sediment Samples (S1D)

This procedure for nitrate plus nitrite consists of heating the sediment slurry and then centrifuging out the solids. The liquid phase is then analyzed for nitrate plus nitrite. This separation procedure is based on the high solubility of nitrates and nitrites but should be considered operationally defined. The apparatus and reagents will depend upon which of the methods listed in the nitrate and nitrite sections for water analysis is used.

Procedure

Weigh a 0.5- to 1.0-g sample of the wet sediment. Transfer to a 200-ml Erlenmeyer flask and add 50 ml distilled water and 3 to 4 drops of conc. sulfuric acid. This treatment will preserve the sample for 24 hr if necessary.

Add 50 ml distilled water to the acidified slurry and boil the sample for 15 min. Since the procedure is operationally defined, the heating time should be standardized for all samples.

Transfer the sample to a centrifuge tube and centrifuge the slurry at 2000 rpm for 5 to 10 min. Decant the liquid phase into a 200-ml volumetric flask.

Add 50 ml distilled water to the solids in the centrifuge tube and thoroughly mix the sample. Centrifuge for 5 to 10 min at 2000 rpm. Decant the wash into the volumetric flask.

Repeat the washing procedure a second time and add the wash to the volumetric flask. Dilute the sample to volume with distilled water. Filter the sample through a 0.45-μ pore-size membrane filter.

Analyze the sample using one of the nitrate plus nitrite procedures in the water analysis section. If it is necessary to know the nitrate concentration, the sample should be analyzed twice: once for nitrate plus nitrite using the cadmium reduction column or the hydrazine reduction method, and a second time for nitrite by omitting the use of the cadmium reduction column or hydrazine sulfate. Nitrate can then be calculated by subtraction.

AR301345

If the sample is to be analyzed for nitrate with the Brucine method, the salt modification recommended for use with seawater samples should be used to correct for the high salt concentration that may be leached from the sediment samples.

Calculations

Determine the nitrate plus nitrite concentration of the sample leachate using the appropriate standard curve. Calculate the nitrate plus nitrite concentration of the sediment sample as follows:

$$\text{nitrate + nitrite mg N/kg (wet basis)} = \frac{(x)(y)(1000)}{g}$$

where

x = nitrate plus nitrite concentration in sample, mg/ℓ

y = sample volume, ℓ (0.2 ℓ as described)

g = wet weight of sediment sample, g

$$\text{nitrate + nitrite mg N/kg (dry basis)} = \frac{(x)(y)(1000)}{(g)(\%\ S)}$$

where

x = nitrate plus nitrite concentration in sample, mg/ℓ

y = sample volume, ℓ (0.2 ℓ as described)

g = wet weight of sediment sample, g

%S = percent solids in sediment (as decimal fraction)

AR301346

Total Kjeldahl Nitrogen

Procedures for Sediment Samples

Method 1: Kjeldahl Digestion

This procedure is essentially the same as that used for TKN analysis of water samples. The sample is digested with a sulfuric acid-potassium sulfate-mercury sulfate solution to convert organic nitrogen to ammonia. The digestate is made alkaline and the ammonia is distilled into boric acid. This solution is then analyzed for ammonia.

Apparatus

Digestion apparatus

Distillation apparatus

Reagents

Digestion solution:

a. Dissolve 8 g red mercuric oxide, HgO, in 50 ml 1:5 H_2SO_4 and dilute to 100 ml with distilled water.

b. Prepare a second solution by dissolving 267 g K_2SO_4 in 1300 ml distilled water and 400 ml conc. sulfuric acid. Add 50 ml of the mercuric sulfate solution and dilute to 2 ℓ.

Phenolphthalein indicator solution: either the aqueous (a) or alcoholic (b) solution may be used:

a. Dissolve 5 g phenolphthalein disodium salt in distilled water and dilute to 1 ℓ. If necessary, add 0.02 N NaOH dropwise until a faint pink color appears.

b. Dissolve 5 g phenolphthalein in 500 ml 95 percent ethyl alcohol or isopropyl alcohol and add 500 ml distilled water. Add 0.02 N NaOH dropwise until a faint pink color appears.

Sodium hydroxide-sodium thiosulfate solution: dissolve 500 g NaOH and 25 g $Na_2S_2O_3 \cdot 5H_2O$ in distilled water and dilute to 1 ℓ.

Boric acid solution: dissolve 20 g anhydrous boric acid, H_3BO_3, in ammonia-free water and dilute to 1 ℓ.

Procedure

Weigh out a 0.5- to 1.0-g aliquot of wet sediment. Transfer to a 800-ml digestion tube and add 100 ml digestion solution. Boil until white fumes appear. Continue heating for an additional 30 min. During this time, the sample flask should be rotated occasionally.

Cool sample to room temperature. Add 500 ml ammonia-free water and 0.3 ml phenolphthalein indicator. Carefully add 25 to 30 ml

AR301347

NaOH-thiosulfate solution to the Kjeldahl flask <u>without</u> mixing the sample. Place the flask on a digestion rack and mix.

NOTE: If the solution is not red at this point, additional NaOH-thiosulfate solution must be added until a red color appears.

Distill over approximately 300 ml of liquid at a rate of 6 to 10 ml/min. Collect the distillate in 50 ml 2 percent boric acid. Dilute to 500 ml.

Analyze the sample using one of the automated methods, direct nesslerization, or titration procedures for ammonia as described in the water section. Nesslerization should only be used when the ammonia concentration is less than 1 mg/ℓ and the titration procedure should only be used when the ammonia concentration is greater than 1 mg/ℓ.

<u>Calculations</u>

$$\text{Total Kjeldahl Nitrogen mg/kg (wet basis)} = \frac{(x)(y)(1000)}{(g)}$$

$$\text{Total Kjeldahl Nitrogen mg/kg (dry basis)} = \frac{(x)(y)(1000)}{(g)(\%\ S)}$$

where

x = ammonia concentration in distillate, mg/ℓ

y = total volume of distillate, ℓ (0.5 as described)

g = wet weight of sediment used, g

% S = percent solids in sediment (as decimal fraction)

Method 2: Block Digestion

The sample is digested with a sulfuric acid-potassium sulfate-mercury sulfate solution on a Technicon digestion block. The digest is diluted to volume and analyzed with an autoanalyzer.

<u>Apparatus</u>

Technicon BD-40 block digestor

Technicon #114-0009-02 test tube rack

Pyrex digestion tubes, 1 by 8 in.

Technicon autoanalyzer:

<u>a</u>. Sampler with 30/hr 2:1 cam

<u>b</u>. Proportionating pumps

AR 301348

c. Colorimeter

d. Recorder

e. Digital printer (optional)

f. Ammonia manifold as shown in Figures 3-13 and 3-14

Teflon boiling stones

Reagents

Ammonia-free water.

Digesting solution: dissolve 2.0 g of HgO in 25 ml of 6 N H_2SO_4. Then carefully add 200 ml of conc. H_2SO_4 to 500 ml of water. While the strong acid solution is still hot, dissolve 134 g of K_2SO_4 in it. Add the HgO solution. Cool the solution, dilute to 1 ℓ, and store above 20°C. It is extremely important that precipitation of the K_2SO_4 be avoided, as this will result in low recoveries for TKN. The digestion tube dilution water should be nitrogen and phosphorus free.

Reagents for automated dilution manifold (Figure 3-13): prepare the sampler wash solution by adding 35 ml of conc. H_2SO_4 to 500 ml of water and diluting to 1 ℓ. Prepare the dilution manifold solution by diluting 12.5 ml of 10 N NaOH to 1 ℓ with water.

Reagents for automated ammonia manifold (Figure 3-14): Prepare complexing reagent by dissolving 33 g of potassium sodium tartrate and 24 g of sodium citrate in 900 ml of water, diluting to 1 ℓ, and adding 0.25 ml of Brij-35 wetting agent (Technicon No. T21-0110).

Prepare alkaline phenol solution: dissolve 83 g of phenol and 36 g of sodium hydroxide in 900 ml of water, cooling, and diluting to 1 ℓ. Store the solution at 4°C.

Prepare sodium hypochlorite solution: dilute 200 ml of Clorox (5.25 percent available Cl_2) to 1 ℓ with water.

Prepare sodium nitroprusside reagent: dissolve 0.5 g of sodium nitroprusside in 900 ml of water and dilute to 1 ℓ. Store the solution at 4°C.

Standards: Prepare stock nitrogen standard containing 0.100 mg N/ml by dissolving 1.050 g of glutamic acid, dried at 105°C for 1 hr, in 900 ml of water. Add 2 ml of conc. H_2SO_4 and dilute to 1 ℓ.

Procedure

Weigh out 0.5 to 1.0 g of dry weight equivalent sediment and transfer to a digestion tube. Add 10 ml digestion solution and 2 to 3 Teflon boiling stones. Mix samples well using a genie vortex mixer.

Place samples in holder and place holder on the digestion block. Heat the samples for 1 hr at 200°C and 1 hr at 370°C (total digestion time is 2 hr).

AR301349

Cool samples to room temperature and dilute to 75 ml with distilled water. Allow solids to settle and decant sufficient liquid to fill autoanalyzer sample cups.

Place standards in sample tray in order of decreasing concentration. Continue filling tray with unknown samples. After the instrument has warmed up for 30 min and a stable baseline has been achieved, begin processing samples at the rate of 30/hr.

Calculations

Determine the ammonia concentrations in the digestates by comparing sample peak height with the standard curve based on the instrument response to the standard ammonia solutions. Calculate the total Kjeldahl nitrogen concentration in the same as follows:

$$\text{TKN mg/kg (wet weight)} = \frac{(x)(y)(1000)}{(g)}$$

$$\text{TKN mg/kg (dry weight)} = \frac{(x)(y)(1000)}{(g)(\%\ S)}$$

where

x = ammonia concentration in digestate, mg/ℓ

y = volume of digestate, ℓ (0.075 ℓ as written)

g = wet weight of sample, g

% S = percent solids in sediment (as decimal fraction)

AR301350

TOTAL PHOSPHATE

Procedures for Sediment Samples (S1D, S2, S3)

There are numerous methods available for the digestion of sediment samples to be analyzed for phosphate. In fact, Aspila et al.[6] reported a literature review summarizing 77 methods. Most procedures consist of strong acid digestion or treatment with an oxidizing agent and a strong acid.

A common feature of the digestion procedures is that the sample treatments are designed to convert all the phosphate compounds to ortho phosphate. The orthophosphate is then quantified using one of the analytical procedures presented earlier. Therefore, a choice of digestion techniques is presented but the analytical procedures are not repeated.

Sample Handling and Storage

Phosphate may interconvert between several forms. However, the compounds are not considered volatile. Therefore, if it is decided to run total phosphate, samples may be stored in a field moist, dried, or frozen condition. This information is summarized in Figure 3-31.

Sample pretreatment

Weigh out a 0.5- to 1.0-g dry weight equivalent of the sediment sample. Continue with one of the digestion procedures presented in a through e below:

a. Perchloric acid digestion.*[1,7] Weigh into a 125-ml beaker an 0.5-g dry weight equivalent of sediment sample. Add 25 ml distilled water and 5 ml conc. HNO_3.

   Mix the sample and evaporate on a hot plate to 5 to 10 ml. Transfer the sample to a 125-ml conical flask. Rinse the beaker with 5 ml conc. HNO_3. Add 5 ml conc. HNO_3, 10 ml of 70 to 72 percent $HClO_4$, and a few boiling stones. Heat on a hot plate and evaporate to

AR301351

* Stone or asbestos cement hoods recommended when perchloric acid is to be used.

the evolution of dense white $HClO_4$ fumes. If the solution is not clear at this point, cover the flask with a watch glass and continue heating until it clears. Add additional conc. HNO_3, if necessary.

Cool the solution and neutralize to the phenolphthalein endpoint with 6 N NaOH.

Filter the sample, if necessary; transfer to a volumetric flask, and dilute to volume. Standards should be carried through the digestion procedure to correct for an ionic strength effect on the colorimetric procedure.

b. Sulfuric acid-nitric acid digestion.[5] Weigh out 0.5 to 1.0 g sediment sample. Transfer to a 250-ml Erlenmeyer flask using a minimum amount of water. Add 5 ml conc. H_2SO_4 and 25 ml conc. HNO_3. Mix the suspension well after the addition of each acid.

Digest slowly on a hot plate with medium heat. Avoid use of high heat as this may cause superheating and result in sample loss. Continue heating until the evolution of white fumes. If the sample is not clear, add conc. HNO_3 and continue the digestion process until a clear digestate is obtained.

NOTE: Do not heat sample to dryness.

Add 25 to 50 ml distilled water to the hot sample and filter immediately. Pour the filtrate through a 4- by 3/4-in. column of cation exchange resin to remove iron. Wash the column with approximately 25 ml distilled water.

Titrate the sample with 6 N NaOH to the phenolphthalein endpoint. Back titrate the sample dropwise with 1 N H_2SO_4 until colorless. Transfer the solution to a 100-ml volumetric flask and dilute to volume.

c. Persulfate digestion (sealed bomb).[6] Accurately weigh a 0.3- to 0.5-g dry weight equivalent of the sample and transfer to a Parr PFTE bomb (Parr Instrument Co., Moline, Illinois). Add 3.0 ± 0.1 g potassium persulfate and 5.0 ml conc. H_2SO_4. Seal the bomb and heat at 135°C for 2 hr.

Transfer the contents of the bomb to a 500-ml volumetric flask and dilute with distilled water.

d. Persulfate digestion.[6] Weigh 0.5-g dry weight equivalent of the sample and transfer to a 150-ml beaker. Add 10 ml 30 percent H_2SO_4 and 2 g potassium persulfate. Mix the suspension and heat on a hot plate for 1 hr. Filter, if necessary, into a 100-ml volumetric flask and dilute to volume.

AR301352

e. Block digestion.[8,9] Weigh 0.5 g dry weight equivalent of sediment and transfer to a Technicon glass digestion tube (No. 114-0024-02). Add 10 ml digestion solution, 1 ml HgO solution, and 2 to 3 boiling stones (ChemPlast, Inc., Wayne, New Jersey). Mix samples using a vortex mixer.

NOTE: The digestion solution is prepared by gradually adding 600-g K_2SO_4 to 1-ℓ conc. H_2SO_4. Allow solution to cool to room temperature, stopper, and store above 20°C.

NOTE: The mercury solution is prepared by dissolving 5-g HgO in 100 ml 10 percent H_2SO_4.

Place samples in digestion rack (Technicon No. 114-0009-02) and place the rack on a block digestor (Technicon No. BD-40). Heat samples 1 hr at 200°C, followed by 1 hr at 370°C. Cool samples and dilute to 75 ml.

Quantification procedure

Dilute the sediment digests to a convenient volume Analyze the digests for phosphate using one of the procedures described earlier.

Calculations

Determine the phosphate concentrations of the digests by comparing sample absorbance with the standard phosphate curve. Calculate the phosphate concentration of the initial sediment samples as follows:

$$\text{Total phosphate mg/kg (wet weight)} = \frac{(x)(y)(1000)}{(g)}$$

$$\text{Total phosphate mg/kg (dry weight)} = \frac{(x)(y)(1000)}{(g)\ (\%\ S)}$$

where

x = phosphate concentration in sediment digest, mg/ℓ

y = final volume of sediment digest, ℓ

g = wet weight of sample digest, g

% S = percent solids in sediment sample as a decimal fraction

AR301353

COD

Procedures for Sediment Samples (S1D)[4]

Apparatus

Reflux apparatus: consisting of 250- or 500-ml Erlenmeyer flasks with ground-glass 24/40 neck* and 300-mm jacket Liebig, West, or equivalent condensers** with 24/40 ground-glass joint

Hot plate: having sufficient power to produce 1.4 W/cm^2 (9 W/in.^{2}) of heating surface, or equivalent, to ensure adequate refluxing of the sample

Reagents

Standard potassium dichromate solution, 0.250 N: dissolve 12.259 g potassium dichromate, $K_2Cr_2O_7$, primary standard grade, previously dried at 103°C for 2 hr, in distilled water and dilute to 1 ℓ. The addition of 0.12 g/ℓ sulphamic acid will eliminate interference due to nitrites in the sample at concentrations up to 6 mg/ℓ.

Sulfuric acid reagent: conc. H_2SO_4 containing 22 g silver sulfate, Ag_2SO_4, per 9-lb bottle. Allow 1 or 2 days for dissolution.

Standard ferrous ammonium sulfate titrant, 0.250 N: dissolve 98 g ferrous ammonium sulfate, $Fe(NH_4)_2(SO_4)_2 \cdot 6H_2O$, in distilled water. Add 20 ml conc. H_2SO_4 (CAUTION!), cool, and dilute to 1 ℓ. This solution must be standardized against $K_2Cr_2O_7$ daily.

Standardization of ferrous ammonium sulfate: dilute 10 ml standard potassium dichromate solution to approximately 100 ml. Add 30 ml conc. H_2SO_4 (CAUTION!) and allow to cool. Titrate with ferrous ammonium titrant, using 2 or 3 drops of ferroin indicator.

$$\text{Normality} = \frac{(\text{ml } K_2Cr_2O_7)(0.25)}{[\text{ml } Fe(NH_4)_2(SO_4)_2]}$$

Ferroin indicator: dissolve 1.485 g 1,10-phenantroline monohydrate and 0.695 g ferrous sulfate, $FeSO_4 \cdot 7H_2O$, in water and dilute to 100 ml. Alternatively, a commercially prepared indicator can be purchased.

Silver sulfate, Ag_2SO_4, reagent powder.

Mercuric sulfate, $HgSO_4$, analytical-grade crystals.

Procedure

Place several boiling stones or glass beads and 1.0 g $HgSO_4$ in a reflux flask.

Transfer 0.5 to 2.0 g blended, wet sediment to the flask. Wash the sediment into the sample flask with a minimum amount of

---

* Corning 5000 or equivalent.
** Corning 2360, 91548, or equivalent.

AR301354

distilled water (25 ml).

Add 25 ml 0.25 N $K_2Cr_2O_7$ to the flask and mix thoroughly.

Slowly, and with constant mixing, add 75 ml of sulfuric acid-silver sulfate solution. Ensure that the mixture is well mixed to avoid localized superheating.

Attach the sample flask to a condenser and reflux for 2 hr. Should the added dichromate dissipate during reflux, either: (1) repeat, using a smaller sample size; or (2) carefully add additional 0.25 N $K_2Cr_2O_7$ through the condenser. Be sure to record any added dichromate.

Allow the sample to cool and rinse the condenser with 40 to 50 ml distilled water.

Add an additional 50 ml of distilled water to the sample and allow to cool to room temperature. Add 3 to 5 drops of ferroin indicator and titrate with 0.25 N $Fe(NH_4)_2(SO_4)_2$ to a sharp color change (blue-green to reddish-brown).

For a blank, reflux 25 ml of distilled water, 25 ml 0.25 N $K_2Cr_2O_7$, 1 g $HgSO_4$, several glass beads or boiling stones, and 75 ml of sulfuric acid-silver sulfate solution for 2 hr. Treat as a sample and titrate with 0.25 N $Fe(NH_4)_2(SO_4)_2$ after cooling and adding 3 to 5 drops of ferroin indicator.

Calculations

The COD concentration of the sediment sample is calculated as follows:

$$\text{COD mg/kg (wet weight)} = \frac{(A - B)(N)(8000)}{g}$$

$$\text{COD mg/kg (dry weight)} = \frac{(A - B)(N)(8000)}{(g)(\% S)}$$

where

A = volume of 0.25 N $Fe(NH_4)_2(SO_4)_2$ for blank titration, ml

B = volume of 0.25 N $Fe(NH_4)_2(SO_4)_2$ for sample titration, ml

N = normality of $Fe(NH_4)_2(SO_4)_2$ used for titration, eq/ℓ

8000 = equivalent weight of oxygen, mg/eq

g = wet weight of sample, g

% S = percent solids in sediment sample (expressed as a decimal fraction)

AR301355

References

1. American Public Health Association. Standard Methods for the Examination of Water and Wastewater Including Bottom Sediments and Sludges. 14th Edition. APHA; New York, New York. 1193 p. (1975).
2. Environmental Protection Agency. "Manual of Methods for Chemical Analysis of Water and Wastes." Environmental Monitoring and Support Laboratory, EPA; Cincinnati, Ohio (1979).
3. Burns, E. R., and Marshall, C. "Correction for Chloride Interference in the Chemical Oxygen Demand Test." Journal of Water Pollution Control Federation 37:1716-1721 (1965).
4. Great Lakes Region Committee on Analytical Methods. "Chemistry Laboratory Manual for Bottom Sediments." U. S. Department of the Interior, Great Lakes Region; Chicago, Illinois. 96 p. (1968).

AR301356

GOD

Procedures for Sediment Samples (S1D)[4]

Apparatus

Incubation bottles, 300-ml capacity, with ground glass stoppers

Incubator, thermostatically controlled at 20° ± 1°C: all light should be excluded to prevent the photosynthetic production of dissolved oxygen by algae in the sample

Graduated cylinders, 1 ℓ or 2 ℓ

Reagents

Distilled water: free of copper, chlorine, chloramines, caustic alkalinity, acids, and organic material.

Phosphate buffer solution: dissolve 8.5 g potassium dihydrogen phosphate, KH_2PO_4; 21.75 g dipotassium hydrogen phosphate, K_2HPO_4; 33.4 g disodium hydrogen phosphate heptahydrate, $Na_2HPO_4 \cdot 7H_2O$; and 1.7 g ammonium chloride, NH_4Cl, in distilled water and dilute to 1 ℓ. The pH of this buffer should be 7.2 without further adjustment. If dilution water is to be stored in the incubator, the phosphate buffer should be added just prior to using the dilution water.

Magnesium sulfate solution: dissolve 22.5 g magnesium sulfate, $MgSO_4 \cdot 7H_2O$, in distilled water and dilute to 1 ℓ.

Calcium chloride solution: dissolve 27.5 g anhydrous calcium chloride, $CaCl_2$, in distilled water and dilute to 1 ℓ.

Ferric chloride solution: dissolve 0.25 g ferric chloride, $FeCl_3 \cdot 6H_2O$, in distilled water and dilute to 1 ℓ.

Sodium sulfite solution, 0.025 N: dissolve 1.575 g anhydrous sodium sulfite, Na_2SO_3, in 1 ℓ distilled water. This solution is not stable and should be prepared daily.

Seeding material: satisfactory seed may sometimes be obtained by using the supernatant liquor from domestic sewage which has been stored at 20°C for 24 to 36 hr. Refer to ASTM[3] for a more detailed explanation of seeding material.

Dilution water: store distilled water in cotton-plugged bottles for a sufficient length of time to become saturated with DO. The water should be aerated by shaking a partially filled bottle or using a supply of clean compressed air. Situations may be encountered where it is desired to use stabilized river water to check stream performance with laboratory procedure. The distilled water used should be as near as possible to 20°C and of high purity. Place the desired volume of distilled water in a suitable bottle and add 1 ml each of phosphate buffer, magnesium sulfate, calcium chloride, and ferric chloride for each liter of water.

AR301357

Seeding: use the seed that has been found by practical experience to be the most satisfactory for the particular material

under study.. Only past experience can determine the actual amount of seed to be added per liter but the amount should give an oxygen depletion of approximately 2 mg/ℓ. The amount of seed required may vary with the source of the seed and will have to be established through experience. If the sample contains organic compounds not amenable to oxidation by domestic sewage seed, it may be necessary to use seed prepared from soil, an acclimated seed developed in the laboratory, or sediments collected below a particular waste discharge (preferably 2 to 5 miles below the point of discharge). Seeded dilution water should be used the same day it is prepared.

Procedure

Weigh an appropriate size SID sediment sample directly into the BOD bottle (suggested weight of 0.5 to 5.0 g). Each sample should be prepared in replicate.

Fill each BOD bottle with dilution water and place the samples in the incubator. Ensure that air bubbles are not trapped in the BOD bottles. Prepare a blank consisting of dilution water in a separate BOD bottle. Make sure that there is a water seal in the neck of each sample bottle and blank when placed in the incubator. Replenish the water seals on all bottles each morning.

Determine the initial dissolved oxygen concentration of the sample using the azide modification of the iodometric method or a dissolved oxygen probe. This can best be accomplished by directly measuring the dissolved oxygen concentration in the dilution water. This method is recommended because sediment may cause a rapid consumption of oxygen, making it difficult to obtain a stable initial dissolved oxygen reading. (If a probe is used for oxygen measurement, the same sample can be used for immediate dissolved oxygen demand and biochemical oxygen demand.)

Incubate a blank (dilution water) and the sediment suspensions for 5 days at 20°C. Determine residual dissolved oxygen concentrations in the incubated samples using the analytical method of choice. The most reliable BOD determinations will occur in those samples with a residual DO of at least 2 mg/ℓ and a DO depletion of at least 2 mg/ℓ.

It may be desirable to incubate the dilution water as a check on its quality. In order to do this, fill two BOD bottles with unseeded dilution water. Stopper one bottle, fill the water seal,

AR301358

and place in the incubator for 5 days. Analyze the second sample to determine initial dissolved oxygen concentration. Following the 5-day period, determine dissolved oxygen in the incubated sample. The oxygen depletion should not be more than 0.2 mg/ℓ and preferably not more than 0.1 mg/ℓ. If these values are exceeded, the quality of the dilution water or the treatment of samples (filling of water seals, etc.) should be considered suspect.

It is also recommended that the analyst routinely run pure organic compounds for which the BOD is known or determinable. This is necessary because the quality of the dilution water, the effectiveness of the seed, the technique of the analyst, and the presence of toxic substances can all influence BOD results. The use of known standards will indicate whether any of the identified factors are out of control.

Prepare a stock BOD standard solution by dissolving 0.150 g reagent grade glucose and 0.150 g reagent grade glutamic acid in 1 ℓ of distilled water. The solids should be dried for 1 hr at 103°C prior to weighing.

Prepare a working BOD standard solution by diluting 20 ml of the stock solution to 1 ℓ with seeded dilution water. Fill three BOD bottles and incubate at 20°C for 5 days. The resultant BOD of these samples should be 218 mg/ℓ ± 11 mg/ℓ. Any appreciable deviation from these expected results raises questions on the quality of the dilution water, the viability or suitability of the seed material, or the analytical technique.

Interferences

Many synthetic organic components in industrial waste waters and sediments are not biodegradable without the seeding procedure because of either a toxic effect or a deficiency or absence of appropriate microorganisms.

Chlorine residuals must be removed prior to the test because residual chlorine may be toxic to the microbial population or may oxidize organic material.

Because waters and sediments that contain sulfide, sulfite, or ferrous ions create an immediate demand on the dissolved oxygen, it is necessary to distinguish this immediate dissolved oxygen demand

AR301359

(IDOD) from the true BOD. The depletion of DO in a standard water dilution of the sample in 15 min has been arbitrarily selected as the IDOD.

Calculations

Immediate dissolved oxygen demand (IDOD) is calculated as follows:

$$\text{IDOD mg/kg (wet weight)} = \frac{(O - I)(b)}{g}$$

$$\text{IDOD mg/kg (dry weight)} = \frac{(O - I)(b)}{(g)(\% S)}$$

where

O = dissolved oxygen concentration at time zero, mg/ℓ

I = dissolved oxygen concentration after 15 min, mg/ℓ

b = volume of BOD bottle, ml

g = wet weight of sediment sample used, g

% S = percent solids in sediment sample (expressed as a decimal fraction)

The sediment BOD is calculated as follows:

$$\text{BOD mg/kg (wet weight)} = \frac{(O - F)(b)}{g}$$

$$\text{BOD mg/kg (dry weight)} = \frac{(O - F)(b)}{(g)(\% S)}$$

where

O = dissolved oxygen concentration at time zero, mg/ℓ

F = dissolved oxygen concentration after 5 days, mg/ℓ

b = volume of BOD bottle, ml

g = wet weight of sediment sample used, g

% S = percent solids in sediment sample (expressed as a decimal fraction)

AR301360

References

1. American Public Health Association. Standard Methods for the Examination of Water and Wastewater Including Bottom Sediments and Sludges. 14th Edition. APHA; New York, New York. 1193 p. (1975).

2. Environment Canada. "Analytical Methods Manual." Inland Waters Directorate, Water Quality Branch; Ottawa, Ontario, Canada (1974).

3. American Society for Testing and Materials. Book of ASTM Standards. Part 31. Water. American Society for Testing and Materials; Philadelphia, Pennsylvania (1976).

4. Great Lakes Region Committee on Analytical Methods. "Chemistry Laboratory Manual for Bottom Sediments." U. S. Department of the Interior, Great Lakes Region; Chicago, Illinois. 96 p. (1968).

AR301361