710949

CARBON, TOTAL ORGANIC AND INORGANIC

Carbon may exist in sediment and water samples as either inorganic or organic compounds. Inorganic carbon is present as carbonates, bicarbonates, and possibly free carbon dioxide. Specific types of compounds that are considered to be included in the organic carbon fraction are nonvolatile organic compounds (sugars), volatile organic compounds (mercaptans), partially volatile compounds (oils), and particulate carbonaceous materials (cellulose).[1,2*]

The basis of the method is the catalytic or chemical oxidation of carbon in carbon-containing compounds to carbon dioxide followed by the quantification of the carbon dioxide produced. Alternately, the carbon may be reduced to methane and appropriately quantified. It follows, then, that the distinction between inorganic carbon and organic carbon is the method of sample pretreatment. There are presently two procedures for defining this separation. One method is based on sample treatment with a strong acid. Analysis of an untreated sample is a measure of total carbon while analysis of the acid-treated fraction is a measure of organic carbon. Inorganic carbon is calculated by subtraction. The second method of separation is based on differential thermal combustion with organic compounds being converted to carbon dioxide at 500°C to 650°C[3,4] and inorganic carbon being converted to carbon dioxide at 950°C to 1300°C.[4,5]

Sample Handling and Storage

Flowcharts for the handling of samples intended for organic carbon and inorganic carbon analysis are presented in Figure 3-6 and Figure 3-7. Water and sediment samples to be analyzed for inorganic carbon may be stored in glass or plastic containers. There is no effective preservative because of the carbon dioxide reserve in the atmosphere. The only precaution that can be taken for inorganic

---

* References for this procedure can be found on page 3-76.

AR301362

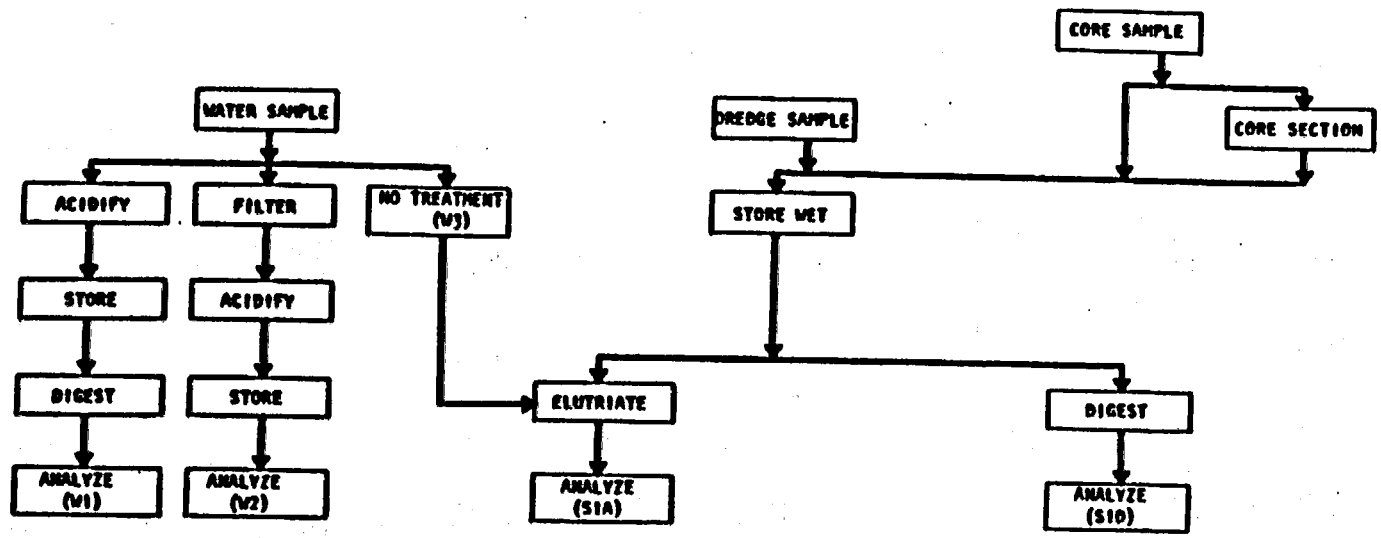

SAMPLE DESIGNATION	W1	W2	W3	S1A	S1B	S1C	S1D	S2	S3
PURPOSE	Total Water Conc.	Soluble Water Conc.	Used in Elutriate	Mobile Conc.			Total Sediment Conc.		
CONTAINER	G,P	G,P	G,P	G,P			G,P		
SAMPLE TREATMENT	None	Filter	None	None			None		
PRESERVATIVE	4°C (Minimize Air Contact.)	4°C	4°C	4°C (Minimize Air Contact. Keep Field Moist.)			4°C		
STORAGE TIME	24 hr	24 hr	-	24 hr					
DIGESTION SOLUTION									
SAMPLE VOLUME OR WEIGHT	100 ml	100 ml	-	100 ml			1 g		

Figure 3-6. Handling and storage of samples for total inorganic carbon analysis

AR301363

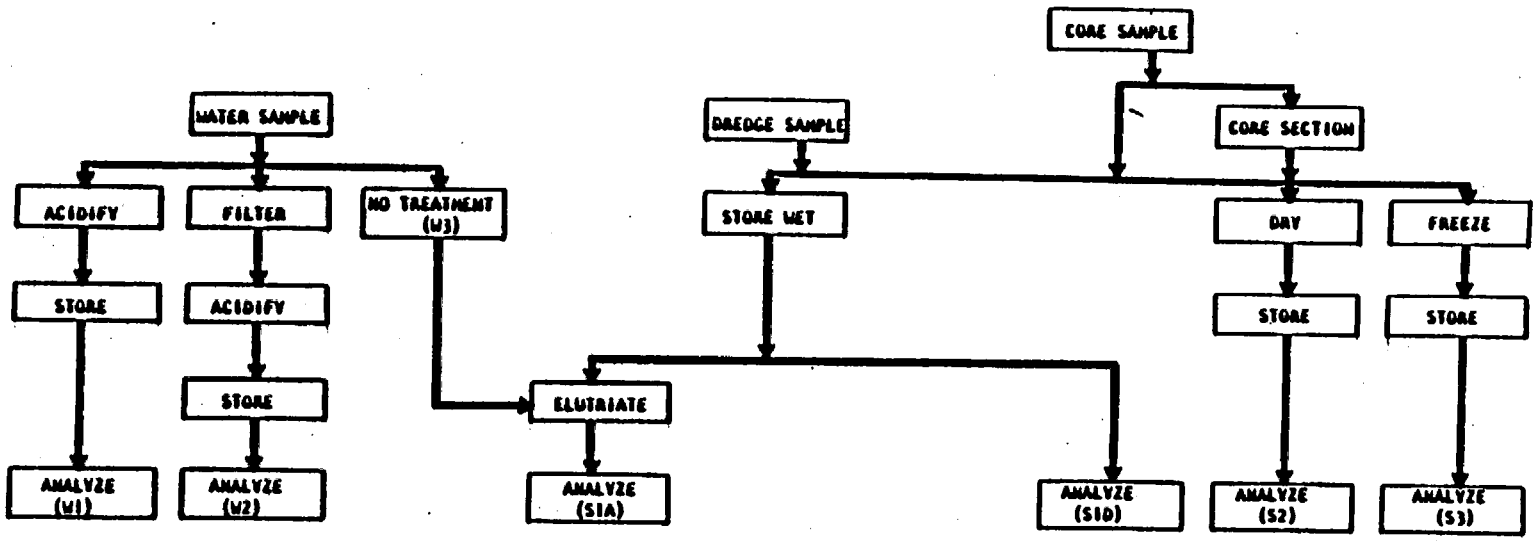

SAMPLE DESIGNATION	W1	W2	W3	S1A	S1D	S2	S3
PURPOSE	Total Water Conc.	Soluble Water Conc.	Used in Elutriate	Mobile Conc.	Total Sediment Conc.	Total Sediment Conc.	Total Sediment Conc.
CONTAINER	G	G	G	G,P	G,P	G,P	G,P
SAMPLE TREATMENT	None	Filter	None	None	None	Air dry	Freeze
PRESERVATIVE	HCl or H_2SO_4 to pH2 4°C	HCl or H_2SO_4 to pH2 4°C	4°C	4°C	4°C	None	None
STORAGE TIME	24 hr	24 hr	<1w	<1w	-	-	-
SAMPLE VOLUME OR WEIGHT	30-100 ml	30-100 ml	Variable		0.5-5.0 g	0.5-5.0 g	0.5-5.0 g

Figure 3-7. Handling and storage of samples for total organic carbon analysis

AR301364

carbon is to completely fill the sample container at the time of sampling (exclude all air bubbles), tightly seal the container, and complete the analysis immediately (Figure 3-6).

Water samples for organic carbon analysis should be stored in glass containers unless substitute containers have been shown not to affect total organic carbon (TOC) analyses. Samples should be processed as soon as possible (within 24 hr if possible) to minimize change due to chemical or biological oxidation. Atmospheric uptake of carbon dioxide is less critical since it would be evolved when the sample is acidified prior to analysis. Sediment samples for organic carbon analysis may be stored in either plastic or glass containers (Figure 3-7). Air drying of sediments (S2) may lead to low TOC results due to oxidation or volatilization. Therefore, moist storage (S1D) or frozen storage (S3) would be the preferred method of storage. If samples are frozen, excessive temperatures should not be used to thaw the samples.

AR301365

Procedure for Water Samples (W1, W2, S1A)

Method 1: Infrared Analysis[6,7]

Apparatus

Sample homogenizer such as a Waring blender or ultrasonic blender

Magnetic stirrer

Hypodermic syringe

Total carbon analyzer, either a single channel or a dual channel instrument (Dow-Beckman Carbonaceous Analyzer Model No. 915, Dohrmann Envirotech DC-50 carbon analyzer, Oceanography International Total Carbon Analyzer, Leco, or equivalent)

Reagents

Distilled water: the distilled water used in the preparation of standards and dilution of samples should be of the highest quality in order to have a small blank.

Organic carbon, stock solution, 1000 mg/ℓ C: dissolve 2.125 g anhydrous potassium biphthalate, $KHC_8H_4O_4$, in distilled water and dilute to 1 ℓ in a volumetric flask.

Organic carbon, standard solutions: prepare standard solution by dilution of the stock solution as required.

Inorganic carbon, stock solution, 1000 mg/ℓ: dissolve 3.500 g sodium bicarbonate, $NaHCO_3$, and 4.418 g sodium carbonate, Na_2CO_3, in distilled water in a 1-ℓ volumetric flask and make up to the mark.

Inorganic carbon, standard solution: prepare standards from the stock solution as required.

Packing for total carbon tube: dissolve 20 g cobalt nitrate, $CO(NO_3)_2 \cdot 6H_2O$, in 50 ml distilled water. Add this solution to 15 g long-fiber asbestos in a porcelain evaporating dish. Mix and evaporate to dryness on a steam bath. Place the dish in a muffle furnace and bring to 950°C. After 1 to 2 hr at this temperature, remove the dish and allow to cool. Break up any large lumps and mix adequately but not excessively. With the combustion tube held in a vertical position, taper joint up, put about 1/2 in. of untreated asbestos in the tube first, then transfer in small amounts, approximately 1 g of catalyst into the tube with forceps or tweezers. As it is added, tap or push the material gently with a 1/4-in. glass rod. Do not force the packing. The weight of the rod itself is sufficient to compress the material. When completed, the length of the packing should be about 5 to 6 cm. Test the packed tube by measuring the flow rate of

RR30 1366

gas through it at room temperature, and then at 750°C. The rate should not drop more than 20 percent.

Packing for carbonate tube (dual channel instrument): place a small wad of quartz wool or asbestos near the exit end of the carbonate evolution tube. From the entrance end add 6 to 12 mesh quartz chips, allowing these to collect against the wad to a length of 10 cm. Pour an excess of 85 percent phosphoric acid, H_3PO_4, into the tube while holding it vertically and allow the excess to drain out.

Nitrogen gas, carbon dioxide free.

Procedure

Turn on the infrared analyzer, recorder, and tube furnaces, setting the total carbon furnace at 950°C and the carbonate furnace at 175°C. Allow sufficient warm-up time for stable, drift-free operation; about 2 hr is required. If used daily, the analyzer can be left on continuously. Adjust the oxygen flow rate to 80 to 100 ml/min through the total carbon tube. With other instruments, follow manufacturer's directions to warm up the instrument.

Immediately prior to carrying out calibrations or analyses, inject several portions of the appropriate standard into the tube to be used, until constant readings are obtained. The actual injection technique is as follows: rinse the syringe several times with the solution to be analyzed, fill, and adjust the volume to be pipeted. Wipe off the excess with soft paper tissue, taking care that no lint adheres to the needle. Remove the plug from the syringe holder, insert the sample syringe, and inject the sample into the combustion tube with a single, rapid movement of the thumb. Leave the syringe in the holder until the flow rate returns to normal, then replace it with the plug.

Successively introduce a convenient sized aliquot (20 to 50 µl) of each organic carbon standard and a blank into the total carbon tube and record peak heights. Between injections allow the recorder pen to return to its baseline. When a dual channel instrument is used, the standardization procedure must be repeated using carbonate standards to calibrate the low temperature channel.

Thoroughly mix the sample. Inject a convenient sized aliquot (20 to 50 µl) of the sample into the total carbon tube and

AR301367

record the peak height. This result is a measure of the organic carbon concentration and the inorganic carbon concentration of the sample.

Thoroughly mix the sample using a Waring blender or an ultrasonic homogenizer. Transfer 10 to 15 ml of sample to a 30-ml beaker and acidify with concentrated HCl to a pH of 2 or less. Purge the sample with carbon dioxide free nitrogen gas for 5 to 10 min. Plastic tubing should not be used during the purging process unless it has been previously shown that it will not add organic carbon to the sample.

Mix the acidified sample on a magnetic stirrer. While stirring, withdraw a subsample from the beaker using a hypodermic needle with a 150-µm opening. Inject the sample into the carbon analyzer to be used and record the peak height. This result is a measure of the organic carbon concentration of the sample.

Using either clear or filtered water samples, analytical precision will approach 1 to 2 percent or 1 to 2 mg/l carbon, whichever is greater. Analytical precision for unfiltered water samples will increase to 5 to 10 percent because of the difficulty associated with sampling particulate matter and the fact that the needle opening of the syringe limits the maximum size of the particles that can be included in the sample.

Calculations

Dual-channel instrument. Prepare calibration curves derived from the peak heights obtained with the standard total carbon and inorganic carbon solutions.

Determine the concentration of total carbon and inorganic carbon in the sample by comparing sample peak heights with the calibration curves.

Determine the concentration of total inorganic carbon in the sample by subtracting the organic carbon value from the total carbon value.

Single-channel instrument. Prepare a calibration curve derived from the peak heights obtained with the standard total carbon solutions. Determine the total carbon concentration in the sample by comparing the peak height of the first sample injection with the

AR301368

calibration curve. Determine the organic carbon concentration in the sample by comparing the peak height of the second sample injection with the calibration curve. Inorganic carbon concentrations are calculated by subtracting the organic carbon concentration from the total carbon concentration.

AR301369

Procedures for Sediment Samples (S1D, S3)

Method 1: Sample Ignition

Apparatus

Induction furnace such as the Leco WR-12, Dohrmann DC-50, Coleman CH analyzer, or Perkin Elmer 240 elemental analyzer

Combustion boats

Microbalance

Desiccator

Reagents

10 percent hydrochloric acid: mix 100 ml concentrated HCl with 900 ml distilled water.

Copper oxide fines.

Benzoic acid.

Procedure

Dry at 70°C and grind the sediment sample.

Weigh a combustion boat and record the weight. Place 0.2 to 0.5 g homogenized sediment in the combustion boat and reweigh. Combustion boats should not be handled with the bare hand during this process.

If total carbon or inorganic carbon is to be determined, Cupric oxide fines may be added to the sample to assist in combustion. Combust the sample in an induction furnace. Record the result as total carbon.

If organic carbon is to be determined, treat a known weight of dried sediment with several drops of 10 percent HCl. Wait until the effervescing is completed and add more acid. Continue this process until the incremental addition of acid causes no further effervescence. Do not add too much acid at one time as this may cause loss of sample due to frothing.

Dry the sample at 70°C and place in a desiccator. Add Cupric oxide fines, combust the sample in an induction furnace, and record the result as organic carbon.

AR301370

Calculations

The carbon content of the sample can be calculated as:

$$\%C = \frac{\text{weight of tube (after-before)}}{\text{sample weight}} \times 27.29$$

Derivation of factor:

$$27.29 = \frac{12.011 \text{ (molecular weight carbon)}}{44.011 \text{ (molecular weight carbon dioxide)}} \times 100\%$$

When the total sample results are used, the result is percent carbon in the sample. When acid-treated samples are used, the result is percent organic carbon. Inorganic carbon is calculated as total carbon minus organic carbon.

Method 2: Differential Combustion[4,5]

Apparatus

Sargent programmed microcombustion apparatus or equivalent

Microbalance

Procedure

Air dry the sediment sample. Using a mortar and pestle, grind the sample to pass a 100-mesh screen.

Combust a known weight of sediment at a programmed heating rate of 300° to 950°C in 10 min and then maintain 950°C for 20 min. Trap the CO_2 in ascarite and record the weight as total carbon. A sample size should be selected that will produce 25 to 50 mg CO_2.

Weigh a second portion of the dried sediment. Combust this sample at a programmed rate of 300° to 650°C in 10 min and maintain 650°C for 20 min. Trap the CO_2 in ascarite and record the weight as organic carbon.

Calculations

The total carbon concentration, C_t, of the sample (in mg/g) is calculated as follows:

$$C_t = \frac{(x_t)\left(\frac{12}{44}\right)}{(g)}$$

AR301371

where

x_t = weight of CO_2 evolved at 950°C, mg

g = weight of sample combusted, g

The organic carbon, C_o, concentration of the sample (in mg/g) is calculated as follows:

$$C_o = \frac{(x_o)\ (\frac{12}{44})}{(g)}$$

where

x_o = weight of CO_2 evolved at 650°C, mg

g = weight of sample combusted, g

Inorganic carbon, C_I, (in mg/g) is calculated as:

$$C_I = C_t - C_o$$

Method 3: Wet Combustion[6,8]

A third method has been used for carbon in sediments. This is based on the oxidation of the sample with dichromate and back titration of the sample with ferrous ammonium sulfate. References are provided for the procedure but details are not given. The procedure is similar to the chemical oxygen demand test which is not specific for carbon. The wet combustion method is a redox procedure and any reduced chemicals in the sediment samples (ferrous iron, manganous manganese, sulfide) will react with the dichromate. Therefore, this procedure is not recommended unless other instrumentation is not available.

AR301372

References

1. U. S. Environmental Protection Agency. "Manual of Methods for Chemical Analysis of Water and Wastes." Methods Development and Quality Assurance Research Laboratory, National Environmental Research Center; Cincinnati, Ohio. 298 p. (1974).

2. U. S. Environmental Protection Agency. "Methods for Chemical Analysis of Water and Wastes." Environmental Monitoring and Support Laboratory, Office of Research and Development, EPA; Cincinnati, Ohio (1979).

3. Giovannini, G., Poggio, G., and Sequi, P. "Use of an Automatic CHN Analyzer to Determine Organic and Inorganic Carbon in Soils." Unpublished Report, Laboratory of Soil Chemistry, via Corridoni, Pisa, Italy. 9 p. (1975).

4. Konrad, J. G., Chesters, G., and Keeney, D. R. "Determination of Organic- and Carbonate-Carbon in Freshwater Lake Sediments by a Microcombustion Procedure." J. Thermal Analysis 2:199-208 (1970).

5. Kemp, A. L. W. "Organic Matter in the Sediments of Lakes Ontario and Erie." Proc. 12th Conference Great Lakes Research 12:237-249 (1969).

6. Environment Canada. "Analytical Methods Manual," Inland Waters Directorate, Water Quality Branch; Ottawa, Canada (1974).

7. American Public Health Association. Standard Methods for the Examination of Water and Wastewater. APHA; New York, New York. 1193 p. (1976).

8. Gaudette, H. E., Flight, W. R., Toner, L., and Folger, D. W. "An Inexpensive Titration Method for the Determination of Organic Carbon in Recent Sediments." J. Sed. Petrology 44:249-253 (1974).

AR301373

METHOD 9045

SOIL pH

1.0 SCOPE AND APPLICATION

1.1 Method 9045 is an electrometric procedure which has been approved for measuring pH in calcareous and noncalcareous soils.

2.0 SUMMARY OF METHOD

2.1 The soil sample is mixed either with Type II water or with a calcium chloride solution (see Section 5.0), depending on whether the soil is considered calcareous or noncalcareous. The pH of the solution is then measured with a pH meter.

3.0 INTERFERENCES

3.1 Samples with very low or very high pH may give incorrect readings on the meter. For samples with a true pH of >10, the measured pH may be incorrectly low. This error can be minimized by using a low-sodium-error electrode. Strong acid solutions, with a true pH of <1, may give incorrectly high pH measurements.

3.2 Temperature fluctuations will cause measurement errors.

3.3 Errors will occur when the electrodes become coated. If an electrode becomes coated with an oily material that will not rinse free, the electrode can either (1) be cleaned with an ultrasonic bath, or (2) be washed with detergent, rinsed several times with water, placed in 1:10 HCl so that the lower third of the electrode is submerged, and then thoroughly rinsed with water.

4.0 APPARATUS AND MATERIALS

4.1 pH Meter with means for temperature compensation.

4.2 Electrodes:

4.2.1 Calomel electrode.

4.2.2 Glass electrode.

4.2.3 A combination electrode can be employed instead of calomel or glass.

4.5 Beaker: 50-mL.

AR301374

4.6 Volumetric flask: 2-Liter.

4.7 Volumetric flask: 1-Liter.

5.0 REAGENTS

5.1 ASTM Type II water (ASTM D1193): Water should be monitored for impurities.

5.2 Primary standard buffer salts are available from the National Bureau of Standards (NBS) and should be used in situations where extreme accuracy is necessary. Preparation of reference solutions from these salts requires some special precautions and handling, such as low-conductivity dilution water, drying ovens, and carbon-dioxide-free purge gas. These solutions should be replaced at least once each month.

5.3 Secondary standard buffers may be prepared from NBS salts or purchased as solutions from commercial vendors. These commercially available solutions, which have been validated by comparison with NBS standards, are recommended for routine use.

5.4 Stock calcium chloride solution ($CaCl_2$), 3.6 M: Dissolve 1059 g of $CaCl_2 \cdot 2H_2O$ in Type II water in a 2-liter volumetric flask. Cool the solution, dilute it to volume with Type II water, and mix it well. Dilute 20 mL of this solution to 1 liter with Type II water in a volumetric flask and standardize it by titrating a 25-mL aliquot of the diluted solution with standard 0.1 N $AgNO_3$, using 1 mL of 5% K_2CrO_4 as the indicator.

5.5 Calcium chloride ($CaCl_2$), 0.01 M: Dilute 50 mL of stock 3.6 M $CaCl_2$ to 18 liters with Type II water. If the pH of this solution is not between 5 and 6.5, adjust the pH by adding a little $Ca(OH)_2$ or HCl. As a check on the preparation of this solution, measure its electrical conductivity. The specific conductivity should be 2.32 $\pm$ 0.08 mmho per cm at 25°C.

6.0 SAMPLE COLLECTION, PRESERVATION, AND HANDLING

6.1 All samples must be collected using a sampling plan that addresses the considerations discussed in Chapter Nine of this manual.

6.2 Samples should be analyzed as soon as possible.

7.0 PROCEDURE

7.1 Calibration:

7.1.1 Because of the wide variety of pH meters and accessories, detailed operating procedures cannot be incorporated into this method. Each analyst must be acquainted with the operation of each system and familiar with all instrument functions. Special attention to care of the electrodes is recommended.

AR301375

7.1.2 Each instrument/electrode system must be calibrated at a minimum of two points that bracket the expected pH of the samples and are approximately three pH units or more apart. Repeat adjustments on successive portions of the two buffer solutions until readings are within 0.05 pH units of the buffer solution value.

7.2 Sample preparation and pH measurement of noncalcareous soils:

7.2.1 To 20 g of soil in a 50-mL beaker, add 20 mL of Type II water and stir the suspension several times during the next 30 min.

7.2.2 Let the soil suspension stand for about 1 hr to allow most of the suspended clay to settle out from the suspension.

7.2.3 Adjust the electrodes in the clamps of the electrode holder so that, upon lowering the electrodes into the beaker, the glass electrode will be immersed just deep enough into the clear supernatant solution to establish a good electrical contact through the ground-glass joint or the fiber-capillary hole. Insert the electrodes into the sample solution in this manner. For combination electrodes, immerse just below the suspension.

7.2.4 If the sample temperature differs by more than 2°C from the buffer solution, the measured pH values must be corrected.

7.2.5 Report the results as "soil pH measured in water."

7.3 Sample preparation and pH measurement of calcareous soils:

7.3.1 To 10 g of soil in a 50-mL beaker, add 20 mL of 0.01 M $CaCl_2$ (Step 5.5) solution and stir the suspension several times during the next 30 min.

7.3.2 Let the soil suspension stand for about 30 min to allow most of the suspended clay to settle out from the suspension.

7.3.3 Adjust the electrodes in the clamps of the electrode holder so that, upon lowering the electrodes into the beaker, the glass electrode will be immersed well into the partly settled suspension and the calomel electrode will be immersed just deep enough into the clear supernatant solution to establish a good electrical contact through the ground-glass joint or the fiber-capillary hole. Insert the electrode into the sample solution in this manner.

7.3.4 If the sample temperature differs by more than 2°C from the buffer solution, the measured pH values must be corrected.

7.3.5 Report the results as "soil pH measured in 0.01 M $CaCl_2$".

AR301376

8.0 QUALITY CONTROL

8.1 Duplicate samples and check standards should be analyzed routinely.

8.2 Electrodes must be thoroughly rinsed between samples.

9.0 METHOD PERFORMANCE

9.1 No data provided.

10.0 REFERENCES

10.1 None required.

AR301377

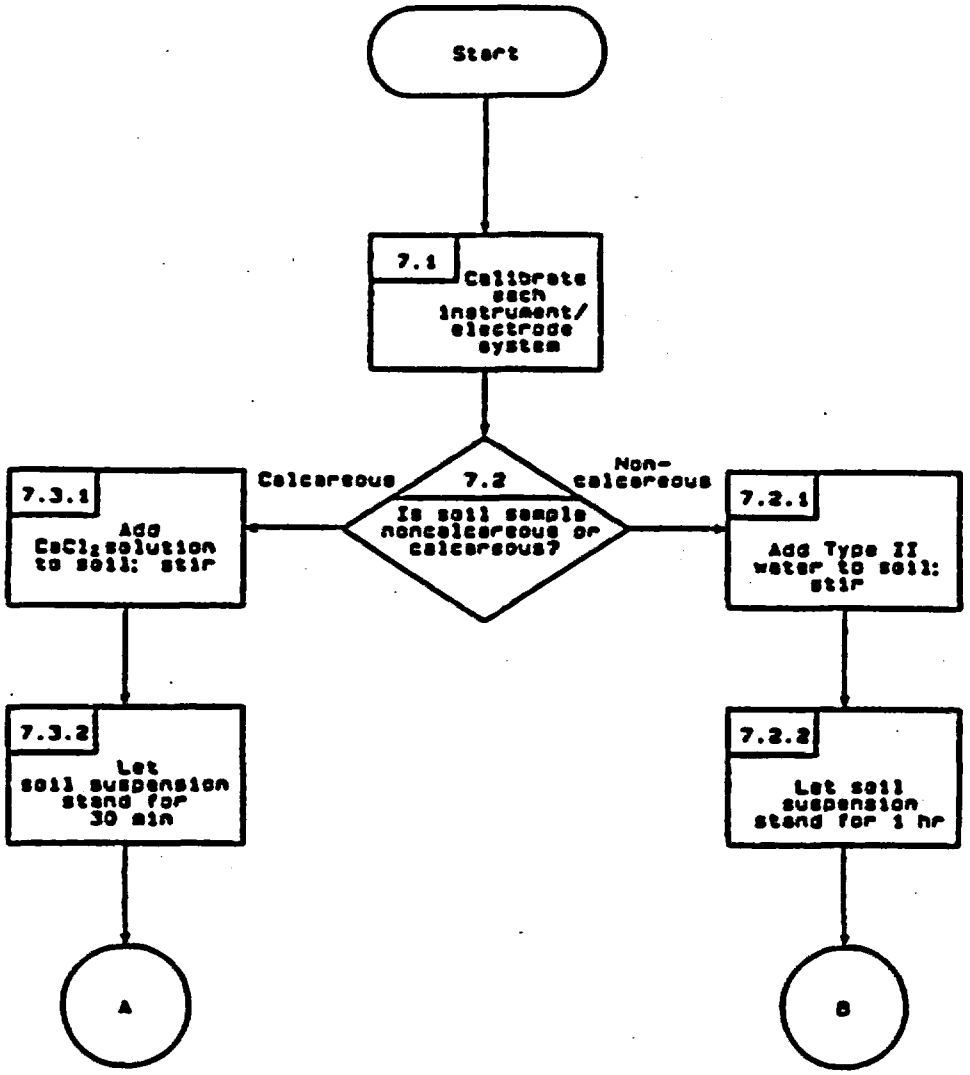

AR301378

Revision 0
Date September 1986

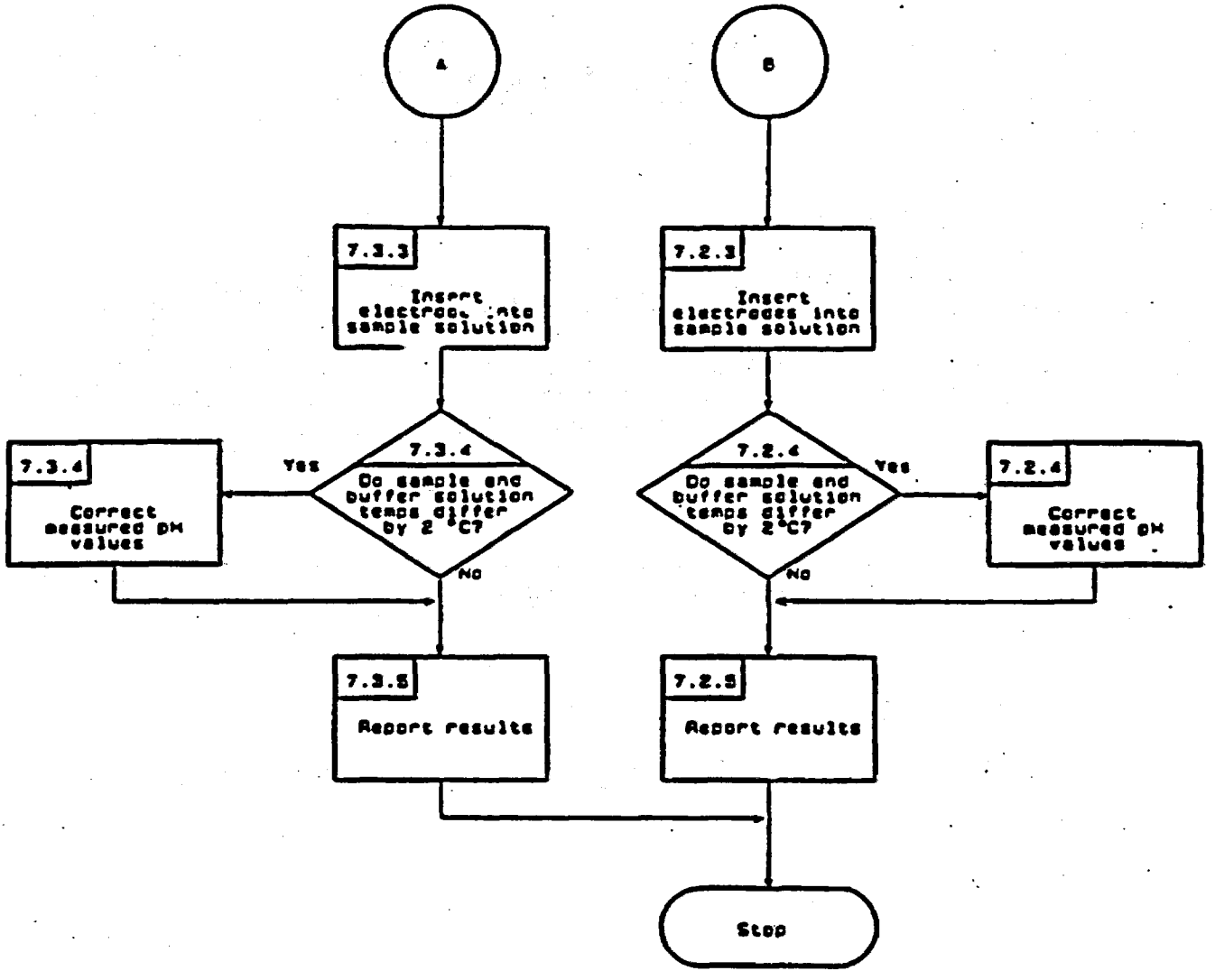
A
B
7.3.3
Insert electrodes into sample solution
7.2.3
Insert electrodes into sample solution
7.3.4
Do sample and buffer solution temps differ by 2 °C?
Yes
No
7.3.4
Correct measured pH values
7.2.4
Do sample and buffer solution temps differ by 2 °C?
Yes
No
7.2.4
Correct measured pH values
7.3.5
Report results
7.2.5
Report results
Stop

AR301379

METHOD 9081

CATION-EXCHANGE CAPACITY OF SOILS (SODIUM ACETATE)

1.0 SCOPE AND APPLICATION

1.1 Method 9081 is applicable to most soils, including calcareous and noncalcareous soils. The method of cation-exchange capacity by summation (Chapman, 1965, p. 900; see Paragraph 10.1) should be employed for distinctly acid soils.

2.0 SUMMARY OF METHOD

2.1 The soil sample is mixed with an excess of sodium acetate solution, resulting in an exchange of the added sodium cations for the matrix cations. Subsequently, the sample is washed with isopropyl alcohol. An ammonium acetate solution is then added, which replaces the adsorbed sodium with ammonium. The concentration of displaced sodium is then determined by atomic absorption, emission spectroscopy, or an equivalent means.

3.0 INTERFERENCES

3.1 Interferences can occur during analysis of the extract for sodium content. Thoroughly investigate the chosen analytical method for potential interferences.

4.0 APPARATUS AND MATERIALS

4.1 Centrifuge tube and stopper: 50-mL, round-bottom, narrow neck.

4.2 Mechanical shaker.

4.3 Volumetric flask: 100-mL.

5.0 REAGENTS

5.1 Sodium acetate (NaOAc), 1.0 N: Dissolve 136 g of $NaC_2H_2O_2 \cdot 3H_2O$ in water and dilute it to 1,000 mL. The pH of this solution should be 8.2. If needed, add a few drops of acetic acid or NaOH solution to bring the reaction of the solution to pH 8.2.

5.2 Ammonium acetate (NH_4OAc), 1 N: Dilute 114 mL of glacial acetic acid (99.5%) with water to a volume of approximately 1 liter. Then add 138 mL of concentrated ammonium hydroxide (NH_4OH) and add water to obtain a volume of about 1,980 mL. Check the pH of the resulting solution, add more NH_4OH, as needed, to obtain a pH of 7, and dilute the solution to a volume of 2 liters with water.

AR301380

5.3 Isopropyl alcohol: 99%.

6.0 SAMPLE COLLECTION, PRESERVATION, AND HANDLING

6.1 All samples must be collected using a sampling plan that addresses the considerations discussed in Chapter Nine of this manual.

7.0 PROCEDURE

7.1 Weigh 4 g of medium- or fine-textured soil or 6 g of coarse-textured soil and transfer the sample to a 50-mL, round-bottom, narrow-neck centrifuge tube. (A fine soil has >50% of the particles <0.074 mm, medium soil has >50% >0.425 mm, while a coarse soil has more than 50% of its particles >2 mm.

7.2 Add 33 mL of 1.0 N NaOAc solution, stopper the tube, shake it in a mechanical shaker for 5 min, and centrifuge it until the supernatant liquid is clear.

7.3 Decant the liquid, and repeat Paragraph 7.2 three more times.

7.4 Add 33 mL of 99% isopropyl alcohol, stopper the tube, shake it in a mechanical shaker for 5 min, and centrifuge it until the supernatant liquid is clear.

7.5 Repeat the procedure described in Paragraph 7.4 two more times.

7.6 Add 33 mL of NH_4OAc solution, stopper the tube, shake it in a mechanical shaker for 5 min, and centrifuge it until the supernatant liquid is clear. Decant the washing into a 100-mL volumetric flask.

7.7 Repeat the procedure described in Paragraph 7.6 two more times.

7.8 Dilute the combined washing to the 100-mL mark with ammonium acetate solution and determine the sodium concentration by atomic absorption, emission spectroscopy, or an equivalent method.

8.0 QUALITY CONTROL

8.1 All quality control data should be maintained and available for easy reference or inspection.

8.2 Employ a minimum of one blank per sample batch to determine if contamination or any memory effects are occurring.

8.3 Materials of known cation-exchange capacity must be routinely analyzed.

9.0 METHOD PERFORMANCE

9.1 No data provided.

10.0 REFERENCES

10.1 This method is based on Chapman, H.D., "Cation-exchange Capacity," pp. 891-900, in C.A. Black (ed.), Method of Soil Analysis, Part 2: Chemical and Microbiological Properties, Am. Soc. Agron., Madison, Wisconsin (1965).

METHOD 9081

CATION-EXCHANGE CAPACITY OF SOILS (SODIUM ACETATE)

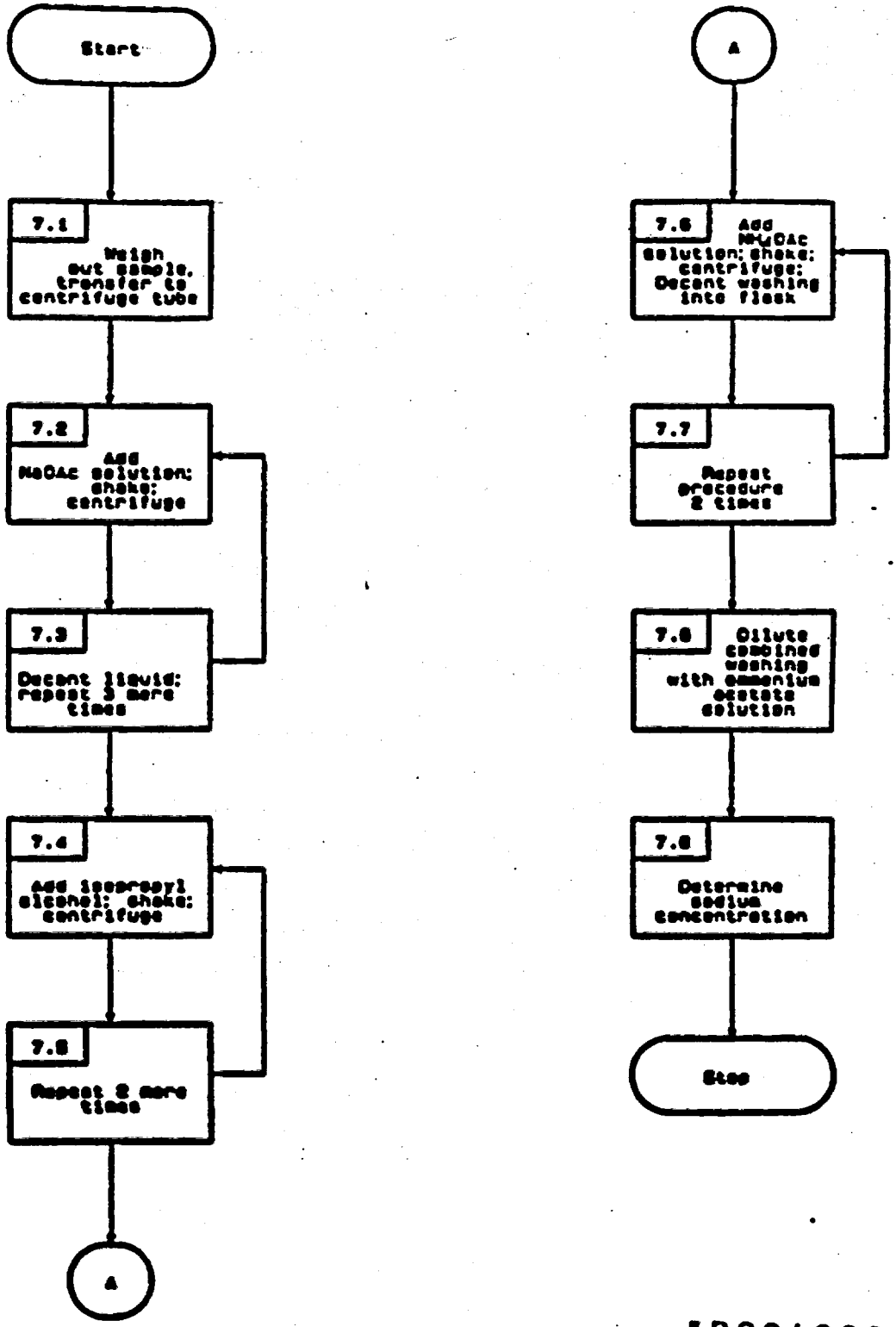

AR301383

Revision 0
Date September 1986

Ebasco Services Incorporated
REM III Program
Zone Program Management Office
2000 15th Street North
Arlington, VA 22201
Phone: (703) 558-7555

REM III SAS No.

553 09 03

REM III TEAM LABORATORY
SPECIAL ANALYTICAL SERVICES
Regional Office Request

[ ] Regional Transmittal [ ] Telephone Request

A. Regional Office: NUS-Pittsburgh and Site Name: Croydon TCE

B. Regional Laboratory Service Coordinator: Greg Zimmerman

C. Telephone Number: (412) 788-1080

D. Date of Request: September 22, 1988

Please provide below a description of your request for Special Analytical Services under the REM III Program. In order to most efficiently obtain capability for your request, please address the following considerations, if applicable. Incomplete or erroneous information may result in delay in processing your request. Provide response on additional sheets or attach supplementary information as needed.

1. General description of analytical service requested: Analysis of 4 Soil samples for BTU, Percent Ash, and TOC.

2. Definition and number of work units involved (specify whether whole samples or fractions; whether organics or inorganics; whether aqueous or soil and sediments; or whether low, medium, or high concentration: 4 low concentration soil samples.

3. Purpose of analysis (specify whether Remedial or Enforcement Action, RCRA, NPDES, etc.): RI/FS

4. Data Quality Objectives (specify whether screening analysis, engineering support or confirmational analysis): Engineering Support DQO Level III.

5. Estimated date(s) of collection: November 7 - 11, 1988

6. Estimated date(s) and method of shipment: November 7 - 11, 1988. Samples will be shipped by overnight air carrier. These dates are tentative and are dependent on the project remaining on schedule.

7. Approximate number of days results are required after receipt of samples by laboratory: 40 days

8. Analytical protocol required (attach copy if protocol other than currently approved under this contract or CLP program):
BTU - ASTM D 3286-85 All methods are attached.
Percent Ash - ASTM D 2974-84
TOC - page 3-73 from "Procedures for Handling and Chemical Analysis of Sediment and Water Samples", EPA, May 1981.

9. Special technical instructions (if outside protocol requirements, specify compound names, detection limits, etc.):

10. Analytical results required (if known, specify format for data sheets, QA/QC reports, chain-of-custody, documentation, etc.). If not completed, format of results will be left to discretion of the laboratory: Data sheets, chain-of-custody forms, all calculations, and SAS Request Form.

11. Other instructions (use additional sheets or attach supplementary information, as needed):

AR301386

12. Name of sampling/shipping contact: Greg Zimmerman

Phone: (412) 788-1080

AR301387

I. DATA REQUIREMENTS

PARAMETER	mg/l DETECTION LIMIT	PRECISION DESIRED (+ % or Conc.)
BTU	Not Specified	Not Specified
Percent Ash	Not Specified	Not Specified
TOC	Not Specified	Not Specified

II. QUALITY CONTROL REQUIREMENTS

SAMPLES CONTROL REQUIRED	CONTROL FREQUENCY OF SAMPLES	PRECISION DESIRED LIMITS (+ or Conc.)
None Specified		

III. ACTION REQUIRED IF LIMITS ARE EXCEEDED:

None Specified

2034-619y

D3286-85

© COPYRIGHT by American Society for Testing and Materials.
This copy is made with the permission of ASTM.
Any further reproduction is prohibited.

AR301389

Standard Test Method for GROSS CALORIFIC VALUE OF COAL AND COKE BY THE ISOTHERMAL-JACKET BOMB CALORIMETER[1]

This standard is issued under the fixed designation D 3286, the number immediately following the designation indicates the year of original adoption or, in the case of revision, the year of last revision. A number in parentheses indicates the year of last reapproval. A superscript epsilon (ε) indicates an editorial change since the last revision or reapproval.

1. Scope

1.1 This test method covers the determination of the gross calorific value of coal and coke by the isothermal-jacket bomb calorimeter.

1.2 The values stated in SI units are to be regarded as the standard.

1.3 *This standard may involve hazardous materials, operations, and equipment. This standard does not purport to address all of the safety problems associated with its use. It is the responsibility of whoever uses this standard to consult and establish appropriate safety and health practices and determine the applicability of regulatory limitations prior to use.* Specific precautionary statements are given in Section 9.

2. Applicable Documents

2.1 *ASTM Standards:*

D 121 Definitions of Terms Relating to Coal and Coke[2]

D 346 Method of Collection and Preparation of Coke Samples for Laboratory Analysis[2]

D 1193 Specification for Reagent Water[3]

D 2013 Method of Preparing Coal Samples for Analysis[2]

D 3173 Test Method for Moisture in the Analysis Sample of Coal and Coke[2]

D 3177 Test Methods for Total Sulfur in the Analysis Sample of Coal and Coke[2]

D 3180 Method for Calculating Coal and Coke Analyses from As-Determined to Different Bases[2]

D 4239 Test Method for Sulfur in the Analysis Sample of Coal and Coke Using High Temperature Tube Furnace Combustion Methods[2]

E 1 Specification for ASTM Thermometers[4]

E 144 Recommended Practice for Safe Use of Oxygen Combustion Bombs[5]

3. Terminology

3.1 *Definitions:*

3.1.1 *calorific value*—the heat produced by combustion of a unit quantity of a substance under specified conditions. It is expressed in this test method in British thermal units per pound (Btu/lb). Calorific value may also be expressed in calories per gram (cal/g) or in the International System of Units (SI), joules per gram (J/g), when required. The unit equivalents are given in Table 1.

3.1.2 *gross calorific value (gross heat of combustion at constant volume), Q_v (gross)*—see Definitions D 121.

3.1.3 *net calorific value (net heat of combustion at constant pressure), Q_p (net)*—see Definitions D 121.

3.1.4 *calorimeter*—as used in this test method, consists of the bomb and its contents, the calorimeter vessel (bucket) with stirrer, the water in which the bomb is immersed, and the portions of the thermometer and the ignition leads within the calorimeter vessel.

3.2 *Descriptions of Terms Specific to this Standard*

3.2.1 *corrected temperature rise*—the temperature of the calorimeter caused by the process that occurs inside the bomb; that is the observed temperature change corrected for various effects as noted in 10.4.1.

---

[1] This test method is under the jurisdiction of ASTM Committee D-5 on Coal and Coke and is the direct responsibility of Subcommittee D05.21 on Methods of Analysis.

Current edition approved Aug. 30, 1985. Published October 1985. Originally published as D 3286 – 73. Last previous edition D 3286 – 84.

[2] *Annual Book of ASTM Standards*, Vol 05.06.

[3] *Annual Book of ASTM Standards*, Vol 11.01.

[4] *Annual Book of ASTM Standards*, Vol 14.03.

[5] *Annual Book of ASTM Standards*, Vol 14.02.

AR301390

NOTE 1—Temperature is measured in either degrees Celsius or degrees Fahrenheit. Thermometer corrections should be applied. Temperatures may be recorded in ohms or other arbitrary units instead of degrees. Consistent units must be used in standardization and the actual calorific value determination. If arbitrary units other than degrees Celsius or Fahrenheit are used, the temperature interval over which all tests are made must not vary so much that an error greater than 0.001°C would be caused.

3.2.2 *energy equivalent, heat capacity, or water equivalent*—the energy required to raise the temperature of the calorimeter one arbitrary unit. This is the quantity that, when multiplied by the corrected temperature rise, then adjusted for extraneous heat effects, and divided by the mass of the sample, gives the gross calorific value.

NOTE 2—Energy units for quantities listed throughout this test method are such that the number of energy units per gram of sample corresponds exactly to the number of Btu's per pound of sample. For brevity these are referred to as Btu's. The actual energies are smaller than those stated by the ratio of the number of pounds per gram (1/453.59). The energy equivalent of the calorimeter has the units (Btu/lb) times (g/deg). Conversion to other units is discussed in Appendix X2. Time is expressed in minutes. Mass is expressed in grams.

4. Summary of Method

4.1 Calorific value is determined in this test method by burning a weighed sample, in oxygen, in a calibrated isothermal-jacket bomb calorimeter under controlled conditions. The calorimeter is standardized by burning benzoic acid. The calorific value of the sample is computed from temperature observations made before, during, and after combustion, and making proper allowances for heat contributed by other processes, and for thermometer and thermochemical corrections.

NOTE 3—Oxidation after sampling of susceptible low-rank coal or lignite may result in a reduction of calorific value. Unnecessary exposure of the sample to air from the time of sampling or delay in analysis shall be avoided.

5. Significance and Use

5.1 The gross calorific value is used to compute the total calorific content of the quantity of coal represented by the sample for payment purposes, provided the buyer and the seller mutually agree upon this.

5.2 The gross calorific value is used in computing the calorific value versus sulfur content to determine if the coal meets the regulatory requirements for industrial fuels.

5.3 The gross calorific value may be used for evaluating the effectiveness of beneficiation processes, or for research purposes.

6. Apparatus and Facilities

6.1 *Test Space*—A room or area free from drafts and that can be kept at a reasonably uniform temperature for the time required for the determination. The apparatus shall be shielded from direct sunlight and radiation from other heat sources. Thermostatic control of room temperature and controlled relative humidity are desirable.

6.2 *Combustion Bomb*, shall be constructed of materials that are not affected by the combustion process or products sufficiently to introduce measurable heat input of alteration of end products. The bomb must be designed so that all liquid combustion products can be completely recovered by washing the inner surfaces. There must be no gas leakage during a test. The bomb must be capable of withstanding a hydrostatic pressure test of 20 MPa (3000 psig) at room temperature without stressing any part beyond its elastic limit.

6.3 *Balance*—A laboratory balance having the capability to weigh the sample to the nearest 0.0001 g. The balance should be checked periodically to determine its accuracy.

6.4 *Calorimeter Vessel*, made of metal with a tarnish-resistant coating, and with all outer surfaces highly polished. Its size shall be such that the bomb will be completely immersed in water when the calorimeter is assembled. It shall have a device for stirring the water thoroughly and at a uniform rate but with minimum heat input. Continuous stirring for 10 min shall not raise the calorimeter temperature more than 0.01°C (0.02°F) starting with identical temperatures in the calorimeter, room, and jacket. The immersed portion of the stirrer shall be coupled to the outside through a material of low-heat conductivity.

6.5 *Jacket*, a double-walled, air, or water-filled jacket. The calorimeter shall be insulated from the jacket by an air space. The sides, top, and bottom of the calorimeter vessel shall be approximately 10 mm from the inner wall of the jacket to minimize convection currents. Mechanical supports for the calorimeter vessel shall provide as little thermal conduction as possible. The jacket shall be capable of maintaining the temperature constant to within ±0.1°C (±0.2°F) of room temperature at a calorimeter temperature 2°C (4°F) below, and 2°C (4°F) or more above

AR301391

room temperature throughout the determination. If a water-filled jacket is used, it shall have a device for stirring the water at a uniform rate with minimum heat input.

6.6 *Thermometers*, used to measure temperatures in the calorimeter and jacket shall be of any of the following types or combination thereof:

6.6.1 *Liquid-in-Glass Thermometers*, conforming to the requirements for ASTM Thermometers 56C, 56F, 116C, or 117C, as prescribed in Specification E 1. The thermometers shall be tested for accuracy against a known standard (preferably by the National Bureau of Standards). For thermometers 56C and 56F, the calibration should be at intervals no larger than 2.0°C or 2.5°F over the entire graduated scale. The maximum difference in correction between any two test points shall be no more than 0.02°C or 0.05°F. For thermometers 116C and 117C, the calibration should be at intervals no larger than 0.5°C over the entire calibrated range. The maximum difference in correction between any two test points shall not be more than 0.02°C.

6.6.2 *Beckmann Differential Thermometers*, (glass-enclosed scale, adjustable) having a range of approximately 6°C in 0.01°C subdivisions reading upward and conforming to the requirements for Thermometer 115C, as prescribed in Specification E 1, may be used. Each of these thermometers shall be tested for accuracy against a known standard (preferably by the National Bureau of Standards) at intervals no larger than 1°C over the entire graduated scale. The maximum difference in the correction between any two test points shall not be more than 0.02°C.

6.6.3 *Other Thermometers*, of an accuracy equal to or better than 0.001°C, such as platinum resistance or linear thermistor thermometers are satisfactory and may be used if properly calibrated. A Wheatstone bridge and galvanometer capable of measuring resistance to 0.0001 Ω are necessary for use with 25 Ω platinum resistance thermometers.

6.7 *Thermometer Accessories*—A magnifier is required for reading liquid-in-glass thermometers to one tenth of the smallest scale division. This shall have a lens and holder designed so as to introduce no significant errors due to parallax.

6.8 *Sample Holder*—An open crucible of platinum, quartz, or acceptable base-metal alloy. Base-metal alloy crucibles are acceptable if, after a few preliminary firings, the weight does not change significantly between tests.

6.9 *Ignition Wire*—The ignition wire shall be 100 mm of 0.16-mm diameter (No. 34 B & S gage) nickel-chromium alloy, (Chromel C) alloy, or iron wire. Platinum wire or palladium, 0.10-mm diameter (No. 38 B & S gage) may be used, provided constant ignition energy is supplied. The length or mass of ignition wire shall remain constant for all calibrations and calorific value determinations.

6.10 *Ignition Circuit*, for ignition purposes shall provide a 6 to 16 V alternating or direct current to the ignition wire. An ammeter or pilot light is required in the circuit to indicate when current is flowing. A step-down transformer, connected to an alternating current lighting circuit, or batteries, may be used.

6.11 *Buret*, used for the acid titration, shall have 0.1-mL divisions.

6.12 *Automated Controller and Temperature Measuring Accessories*, may be used.

7. Reagents

7.1 *Reagent Water*, conforming to Type II of Specification D 1193, shall be used for preparation of reagents and washing of the bomb interior.

7.2 *Purity of Reagents*—Reagent grade chemicals shall be used in all tests. Unless otherwise indicated, it is intended that all reagents shall conform to the specification of the Committee on Analytical Reagents of the American Chemical Society, where such specifications are available.[6] Other grades may be used, provided it is first ascertained that the reagent is of sufficiently high purity to permit its use without lessening the accuracy of the determination.

7.3 *Benzoic Acid* (C_6H_5COOH), shall be the National Bureau of Standards benzoic acid. The crystals shall be pelleted before use. Commercially prepared pellets may be used provided they are made from National Bureau of Standards benzoic acid. The value of heat of combustion of benzoic acid for use in the calibration calculations shall be in accordance with the value listed in the National Bureau of Standards certificate issued with the standard.

7.4 *Methyl Orange, Methyl Red, or Methyl*

[6] "Reagent Chemicals, American Chemical Society Specifications," Am. Chemical Soc., Washington, DC. For suggestions on the testing of reagents not listed by the American Chemical Society, see "Reagent Chemicals and Standards," by Joseph Rosin, D. Van Nostrand Co., Inc., New York, NY, and the "United States Pharmacopeia."

AR301392

Purple Indicator, may be used to titrate the acid formed during combustion. The indicator used shall be the same for both calibration and calorific value determinations.

7.5 *Oxygen*, shall be free of combustible matter. Only oxygen manufactured from liquid air, guaranteed to be greater than 99.5% pure, should be used. Oxygen made by the electrolytic process may contain a small amount of hydrogen rendering it unfit without purification.

7.6 *Sodium Carbonate Standard Solution*, sodium carbonate (Na_2CO_3) should be dried for 24 h at 105°C. Dissolve 20.9 g in water and dilute to 1 L. One millilitre of this solution is equivalent to 10.0 Btu in the nitric acid (HNO_3) titration.

8. Sample

8.1 The sample shall be the material pulverized to pass No. 60 (250-μm) sieve, prepared in accordance with either Method D 346 for coke, or Method D 2013 for coal.

8.2 A separate portion of the sample should be analyzed simultaneously for moisture content in accordance with Method D 2013 and Test Method D 3173, so that calculations to other bases can be made.

8.3 Sulfur analysis shall be made in accordance with Test Methods D 3177.

9. Safety Precautions

9.1 The following precautions are recommended for safe calorimeter operation. Additional precautions are given in Recommended Practice E 144. Also consult the calorimeter equipment manufacturer's installation and operating instructions before using the calorimeter.

9.2 The mass of coal or coke sample and the pressure of the oxygen admitted to the bomb must not exceed the bomb manufacturer's recommendations.

9.3 Bomb parts should be inspected carefully after each use. Threads of the main closure should be checked frequently for wear. Cracked or significantly worn parts should be replaced. The bomb should be returned to the manufacturer occasionally for inspection and possible proof firing.

9.4 The oxygen supply cylinder should be equipped with an approved type of safety device, such as a reducing valve, in addition to the needle valve and pressure gage used in regulating the oxygen feed to the bomb. Valves, gages, and gaskets must meet industry safety code. Suitable reducing valves and adaptors for 3 to 4-MPa (300 to 500-psi) discharge pressure are obtainable from commercial sources of compressed gas equipment. The pressure gage shall be checked periodically for accuracy.

9.5 During ignition of a sample, the operator must not permit any portion of her/his body to extend over the calorimeter.

9.6 When combustion aids are employed, extreme caution must be exercised not to exceed the bomb manufacturer's recommendations and to avoid damage to the bomb. Do not fire loose fluffy material, such as unpelleted benzoic acid, unless thoroughly mixed with the coal sample.

9.7 Do not fire the bomb if the bomb has been dropped or turned over after loading, or there is evidence of gas leakage when the bomb is submerged in the calorimeter water.

9.8 For manually operated calorimeters, the ignition circuit switch shall be of the momentary double-contact type, normally open, except when held closed by the operator. The switch should be depressed only long enough to fire the charge.

10. Standardization

10.1 The calorimeter is standardized by combustion of benzoic acid.

10.2 Determine the energy equivalent of the calorimeter for a specific temperature rise as the average of a series of ten individual runs made over a period of not less than 3 days nor more than 5 days. To be acceptable, the standard deviation of the series shall be 6.5 Btu/°C (3.6 Btu/°F) or less (see Table 2). For this purpose, any individual test may be discarded only if there is evidence indicating incomplete combustion. If this limitation is not met, investigate for the source of the problem, correct it, then repeat the entire series to obtain a standard deviation within the acceptable limits.

10.3 *Procedure:*

10.3.1 Regulate the weights of the pellets of benzoic acid in each series to yield approximately the same temperature rise as that obtained with the coals tested in the same laboratory. The usual range of masses is from 0.9 to 1.3 g. Weigh the pellet to the nearest 0.0001 g in the sample holder in which it is to be burned, and record the weight as the mass.

10.3.2 Rinse the bomb, invert to drain, and leave undried. Add 1.0 mL of water to the bomb

AR301393

prior to assembly for a determination.

10.3.3 Connect a measured length of ignition wire to the ignition terminals, with enough slack to allow the ignition wire to maintain contact with the sample.

10.3.4 Assemble the bomb and charge it with oxygen to a consistent pressure between 2 to 3 MPa (20 to 30 atm). This pressure must remain the same for each calibration and each calorific-value determination. Admit the oxygen slowly into the bomb so as not to blow powdered material from the sample holder. If the pressure exceeds the specified pressure, do not proceed with the combustion. Instead, detach the filling connection and exhaust the bomb in the usual manner, and discard the sample.

10.3.5 Fill the calorimeter vessel (bucket) with the measured (or weighed) quantity of water adjusted from 1.0 to 2.0°C (2.0 to 4.0°F) below the jacket temperature, but not lower than 20°C (68°F) (Note 4). Use the same mass of water in each test weighed to ±0.5 g. For 2000-mL calorimeters, the proper quantity can be obtained by use of a volumetric flask calibrated to deliver 2000 ± 0.5 mL. As the density of water varies with temperature, make suitable corrections if the water temperature varies from the temperature at which the flask was calibrated. Place the assembled bomb in the calorimeter vessel. Check that no oxygen bubbles are leaking from the bomb. Place the calorimeter vessel in the jacket; connect the electrodes; place the stirrers, thermometers, and cover in position. Start the stirrer(s) and continue to operate it (them) throughout the determination. Examine the thermometers for liquid separation and correct any separation before proceeding. The starting temperature should be within ±0.5°C (±0.9°F) of that used in the analysis of coal or coke samples.

NOTE 4—The initial temperature adjustment will ensure a final temperature slightly above that of the jacket for 2000-mL calorimeters. Some operators prefer a lower initial temperature so that the final temperature is slightly below that of the jacket. This procedure is also satisfactory. Whichever procedure is used, the same procedure should be used in all tests, including standardization. A small heater may be built into the calorimeter so that the desired starting temperature can be easily attained.

NOTE 5—Check all liquid-in-glass thermometers at least daily for any defects, for example, cracked glass, etc.

10.3.6 Allow 5 min for attainment of equilibrium; then record the calorimeter temperature at 1-min intervals for 5 min or until the rate of change has been nearly constant for 5 min. Use a magnifier when using ASTM Bomb Calorimeter Thermometers 56C or 56F, and estimate all of the readings (except those during the rapid-rise period) to the nearest 0.002°C or 0.005°F. Estimate ASTM Thermometers 115C, 116C, or 117C readings to 0.001°C, and 25 Ω resistance thermometer readings to the nearest 0.0001 Ω. Tap mercury thermometers (for instance with a pencil) just before reading to avoid errors caused by mercury sticking to the walls of the capillary. Ignite the charge at the start of the sixth minute and record the time, t_i, and the thermometer reading, t_i (Note 6). Take the next two readings 0.5 min and 1 min after firing because of the rapid rise. Record subsequent readings at 1-min intervals on the minute until the difference between successive readings has been constant for 5 min. If the final temperature is above the bath temperature, the temperature rises to a maximum and then begins to fall. Record the time, t_f, and the thermometer reading, t_f, after the rate of change has become uniform.

NOTE 6—The calorimeter water temperature must be at the same temperature (±0.05°C) for every determination, at the time of firing, if the Bureau of Mines method for radiation correction is to be used. See Annex A1.5.

10.3.7 Open the cover and remove the bomb. Release the pressure at a uniform rate, such that the operation will require not less than 1 min. Open the bomb and examine the bomb interior. Discard the test if unburned sample or sooty deposits are found. Wash the interior of the bomb with distilled water containing the titration indicator until the washings are free of acid, and titrate the washings with standard sodium carbonate solution.

10.3.8 Remove and measure, or weigh, the combined pieces of unburned ignition (firing) wire and subtract from the original length or weight to determine the wire consumed in firing. If the wire is weighed, remove the ball of oxidized metal from the end of each piece of wire before weighing.

10.4 *Calculations:*

10.4.1 *Temperature Rise*—Using data obtained as prescribed in 10.3.6, compute the corrected temperature rise, t, as follows:

$$t = t_f - t_i + C_1 + C_2 + C_3 \quad (1)$$

AR301394

where:

t = corrected temperature rise, °C or °F,
t_i = initial temperature reading at time of firing,
t_f = final temperature reading,
C_1 = thermometer, emergent stem correction, if required (see Note 7 and Annex A1.4),
C_2 = thermometer setting correction, if required (see Note 7 and Annex A1.3), and
C_3 = radiation correction (see Note 7 and Annex A1.5).

NOTE 7—With all mercury-in-glass thermometers, it is necessary to make corrections if the total calorific value is altered by 5 Btu or more. This represents a change of 0.001°C or 0.002°F in a calorimeter using approximately 2000 g of water. Beckmann thermometers also require a setting correction and an emergent stem correction (Annex A1.3 and A1.4). Solid-stem ASTM Thermometers 56C and 56F do not require emergent stem corrections if all tests, including standardization, are performed within the same 5.5°C (10°F) interval. If operating temperatures range beyond this limit, a differential emergent stem correction (Annex A1.4) must be applied to the corrected temperature rise, t, in all tests, including standardization. A radiation correction must be made in all tests, including standardization.

10.4.2 *Thermochemical Corrections* (see Appendix X1)—Compute the following for each test:

e_1 = correction for the heat of formation of HNO_3, in Btu. Each millilitre of standard Na_2CO_3 is equivalent to 10.0 Btu, and
e_2 = correction for heat of combustion of firing wire, in Btu (Note 8).
= 0.41 Btu/mm or 2.6 Btu/mg for No. 34 B & S gage Chromel C,
= 0.4[illegible] Btu/mm or 3.2 Btu/mg for No. 34 B & S gage iron wire.

NOTE 8—There is no correction for platinum wire provided the ignition energy is constant.

10.4.3 Compute the calorimeter energy equivalent, E, by substituting in the following:

$$E = (gH + e_1 + e_2)/t \qquad (2)$$

where:

E = calorimeter energy equivalent (Note 9),
H = heat of combustion of benzoic acid, as stated in the National Bureau of Standards certificate, Btu/lb in air,
g = mass (weight in air) of benzoic acid, g,
e_1 = titration correction (10.4.2),
e_2 = fuse wire correction (10.4.2), and
t = corrected temperature rise (10.4.1)

NOTE 9—Using the units and corrections as given in 10.4.1 and 10.4.2, the energy equivalent of the calorimeter is such that the calorific value of the coal sample will be obtained directly in British thermal units per pound when the mass sample is taken in grams. The units of the energy equivalent are therefore: (Btu/lb) times (g/deg).

10.5 Repeat the procedure for a total of ten determinations. Compute the standard deviation as illustrated in Table 2.

11. Restandardization

11.1 Make checks on the energy equivalent value after changing the oxygen supply, after changing any part of the calorimeter, and at least once a month otherwise.

11.1.1 If a single new determination differs from the old standard value by 6 Btu/°C (4 Btu/°F) the old standard value is suspect, thereby requiring a second test.

11.1.2 The difference between the two new determinations must not exceed 8 Btu/°C (5 Btu/°F), and the average of the two new determinations must not differ from the old standard by more than 4 Btu/°C (3 Btu/°F). If these requirements are met, do not change the calorimeter standard.

11.1.3 If the requirements given in 11.1.2 are not met, two more determinations must be run. The range of the four values must not exceed 14 Btu/°C (8 Btu/°F), and the average of the four new determinations must not differ from the old standard value by more than 3 Btu/°C (2 Btu/°F). If these requirements are met, do not change the calorimeter standard.

11.1.4 If the requirements given in 11.1.3 are not met, a fifth and sixth determination must be run. The range of the six new determinations must not exceed 17 Btu/°C (10 Btu/°F), and the average of the six values must not differ from the old standard value by more than 2 Btu/°C (2 Btu/°F). If these requirements are met, do not change the calorimeter standard.

11.1.5 If the requirements given in 11.1.4 are not met, four more determinations must be run to complete a series of ten runs. The range of these ten results must not exceed 20 Btu/°C (12 Btu/°F), and the average of the ten new values must not differ from the old standard by more than 1 Btu/°C (1 Btu/°F). If these requirements are met, do not change the calorimeter standard.

11.1.6 If the requirements given in 11.1.5 are not met, the average value from the ten new

AR301395

values must be used for the new standard energy equivalent, provided that the standard deviation of the series does not exceed 6.5 Btu/°C (3.6 Btu/°F).

11.2 The summary of the numerical requirements at each stage of restandardization is given in Table 3.

12. Procedure for Coal and Coke Samples (Note 10)

12.1 Thoroughly mix the analysis sample of coal or coke in the sample bottle and carefully weigh approximately 1 g of it into the sample holder. The sample shall be weighed to the nearest 0.0001 g. Make each determination in accordance with the procedure described in 10.3.2 through 10.3.8.

NOTE 10—For anthracite, coke, and coal of high ash content, that do not readily burn completely, one of the following procedures are recommended (1) The inside of the sample holder is lined completely with ignited asbestos in a thin layer pressed well down into the angles, and the sample is then sprinkled evenly over the surface of the asbestos. (2) The mass of the sample may be varied to obtain good ignition. If the mass is varied, it will be necessary to recalibrate the calorimeter so that the water equivalent will be based on the same temperature rise as that obtained with the new sample weight. (3) A known amount of benzoic acid may be mixed with the sample. Proper allowance must be made for the heat of combustion of benzoic acid when determining the calorific value of the sample.

NOTE 11—For the calorific value of coke, it is necessary to use 3 MPa (30 atm) pressure for both standardization and analysis.

12.2 Determine the sulfur content of the sample by any of the procedures described in Test Methods D 3177.

13. Calculations (Note 2)

13.1 Compute the corrected temperature rise, t, as shown in 10.4.1.

13.2 *Thermochemical Corrections* (Appendix X1)—Compute the following for each test:

c_1 = correction for the heat of formation of HNO_3, Btu. Each milliliter of standard sodium carbonate is equivalent to 10.0 Btu.

c_2 = correction for heat of combustion of ignition wire, Btu.

= 0.41 Btu/mm or 2.6 Btu/mg for No. 34 B & S Chromel C wire.

= 0.49 Btu/mm or 3.2 Btu/mg for No. 34 B & S gage iron wire (Note 8), and

c_3 = correction for difference between heat of formation of H_2SO_4 from the heat of formation HNO_3, Btu.

= 23.7 times percent of sulfur in sample times weight of sample, g.

14. Calorific Value (Note 12)

14.1 *Gross Calorific Value*—Calculate the gross calorific value (gross heat of combustion at constant volume) Q_v (gross) as follows:

$$Q_v \text{ (gross)} = [(tE) - c_1 - c_2 - c_3]/g \qquad (3)$$

where:

Q_v (gross) = gross calorific value, Btu/lb,
t = corrected temperature rise as calculated in 13.1,
E = energy equivalent calculated in 10.4.3,
c_1, c_2, c_3 = corrections as prescribed in 13.2, and
g = mass of sample, g.

14.2 *Net Calorific Value*—Calculate the net calorific value (net heat of combustion at a constant pressure), Q_p (net) as follows:

$$Q_p \text{ (net)} = Q_v \text{ (gross)} - 10.30\,(H \times 9)$$

where:

Q_p (net) = net calorific value, Btu/lb,
Q_v (gross) = gross calorific value, Btu/lb, and
H = total hydrogen, %.

NOTE 12—This calculation gives calorific value in Btu/lb. To obtain calorific value in J/g, see Appendix X2.

15. Report

15.1 The results of the calorific value may be reported on any of a number of bases, differing from each other in the manner that moisture is treated.

15.2 Use the percentage of moisture in the sample passing a No. 60 (250-µm) sieve, Test Method D 3173, to calculate the results of the analysis sample to a dry basis.

15.3 Procedures for converting the value obtained on the analysis sample to other bases are described in Method D 3180.

16. Precision and Bias

16.1 The following criteria should be used for judging the acceptability of results (95% probability) on split (60-mesh (250-µm)) samples.

16.1.1 *Repeatability*—Duplicate results by the same laboratory using the same operator and equipment, should not be considered suspect

AR301396

unless they differ by more than 50 Btu/lb on a dry basis.

16.1.2 *Reproducibility*—The results submitted by two or more laboratories (different equipment, operators, date of test, and different portions of the same pulp) should not be considered suspect unless the two results differ by more than 100 Btu/lb on a dry basis.

16.1.3 *Bias*—There should be no bias because the equipment is standardized with a compound having a known heat of combustion.

TABLE 1 Calorific Value

1 Btu = [illegible] J	1 Btu/lb = [illegible] J/g
1 Calorie[a] = 4.1868 J	1 Btu/lb = [illegible] cal/g

[a] International table calorie.

TABLE 2 Standard Deviations for Calorimeter Standardization[a]

Standardization Number	Column A Energy Equivalent (Btu/lb × g/°C)	Column B Code to 4400 (Column A−4400)	Column C (Column B)[2]
1	4413	13	144
2	4407	7	49
3	4415	15	225
4	4408	8	64
5	4404	4	16
6	4406	6	36
7	4409	9	81
8	4410	10	100
9	4412	12	144
10	4409	9	81
SUM		93	930

Average = $\bar{X}$ = [illegible] = [illegible] = [illegible]

$$\text{Variance} = s^2 = \frac{\Sigma\,(\text{column C}) - [\Sigma\,(\text{column B})^2/n]}{n-1} = \frac{930 - [93^2/10]}{9} = 10.4$$

$$\text{Standard deviation} = s = \sqrt{\text{variance}} = \sqrt{10.4} = 3.22$$

[a] In this example the values of energy equivalent are typical for a calorimeter calibrated so that, if the energy equivalent is multiplied by the temperature rise in degrees Celsius per gram of sample, the calorific value of the sample will be obtained in British Thermal units per pound.

TABLE 3 Summary of Numerical Requirements

NOTE—Test values exceeding table limits require additional runs.[a]

Number of Runs	Maximum Range of Results		Maximum Difference between $\bar{X}_s$ and $\bar{X}_f$[b]	
	Btu/°C	Btu/°F	Btu/°C	Btu/°F
1			±6	±4
2	8	5	±4	±3
4	14	8	±3	±2
6	19	10	±2	±2
10	20	12	±1	±1

[a] Values in this table have been rounded after statistical calculation, and are therefore not precisely in a ratio from 1:2 to 1:10.

[b] $\bar{X}_s$ = average of original standard, and $\bar{X}_f$ = average of check runs.

AR301397

ANNEX

(Mandatory Information)

A1. THERMOMETRIC CORRECTIONS

A1.1 Thermometer Corrections—

A1.1.1 It is necessary to make the following individual corrections if not making the corrections would result in an equivalent change of 5.0 Btu or more.

A1.1.2 *Calibration Correction*, shall be made in accordance with the calibration certificate furnished by the calibration authority.

A1.1.3 *Setting Correction*, necessary for the Beckmann thermometer, it shall be made in accordance with the directions furnished by the calibration authority.

A1.1.4 *Differential Emergent Stem Correction*, the calculation of differential stem correction depends upon the way the thermometer was calibrated and how it is used. Two conditions are possible:

A1.1.4.1 *Thermometers Calibrated in Total Immersion and Used in Partial Immersion*—This emergent stem correction is made as follows:

$$\text{Correction} = C_e = K\,(t_f - t_i)\,(t_f + t_i - L - T)$$

where:

C_e = emergent stem correction,
K = 0.00016 for thermometers calibrated in °C, and 0.00009 for thermometers calibrated in °F,
L = scale reading to which the thermometer was immersed,
T = mean temperature of emergent stem,
t_i = initial temperature reading, and
t_f = final temperature reading.

NOTE A1.1—*Example*: Assume the point L, to which the thermometer was immersed was 15°C; its initial reading, t_i, was 24.127°C, its final reading, t_f, was 27.876, the mean temperature of the emergent stem, T, was 26°C:

Differential stem correction, C_e
= 0.00016 (28 − 24) (28 + 24 − 15 − 26)
= 0.006 4°C.

A1.1.4.2 *Thermometers Calibrated and Used in Partial Immersion, But at a Different Temperature than the Calibrated Temperature*—This emergent stem correction is made as follows:

$$\text{Correction} = C_e = K\,(t_f - t_i)\,(t_s - t_o)$$

where:

C_e = emergent stem correction,
K = 0.00016 for thermometers calibrated in °C, and 0.00009 for thermometers calibrated in °F,
t_i = initial temperature reading,
t_f = final temperature reading,
t_o = observed stem temperature, and
t_s = stem temperature at which the thermometer was calibrated.

NOTE A1.2—*Example*: Assume the initial reading, t_i, was 80°F, the final reading, t_f, was 86°F, and that the observed stem temperature, t_o, was 82°F, and the calibration temperature, t_s, was 72°F, then:

Differential stem correction, C_e
= 0.00009 (86 − 80) (82 − 72)
= 0.005°F.

A1.1.5 *Radiation Corrections*—These are used to calculate heat loss to the water jacket. They are based on the Dickinson formula,[7] the Regnault-Pfaundler formula,[8] or the U.S. Bureau of Mines method.[9] The same method of determining the radiation correction must be used consistently in calibration and test measurements.

A1.1.5.1 *Dickinson Formula*:

$$C_r = -r_1\,(h - t) - r_2\,(t - h)$$

where:

C_r = radiation correction,
r_1 = rate of rise in temperature per minute in the preliminary period,
r_2 = rate of rise of temperature per minute in the final period (if temperature is falling, r_2 is negative),
t_i = firing temperature,
t_f = final temperature, being the first temperature after which the rate of change is constant,
t = time at temperature, t_f, min,
h = time at temperature, $t_i + 0.60\,(t_f - t_i)$, min, and
f = time at temperature, t_f, min.

A1.1.5.2 *Regnault-Pfaundler Formula*

$$C_r = nr_1 + kS$$

where:

C_r = radiation correction,
n = number of minutes in the combustion period,
k = $(r_2 - r_1)/(t'' - t')$,
S = $t_f - t + (1/2)(t_i + t_f - nr_1)$,
t' = average temperature during the preliminary period,
t'' = average temperature during the final period,
$t_0, t_1, t_2 \ldots t_n$ = successive temperature recorded

[7] Dickinson, H. C., Bulletin 15, Bureau of Standards, Vol 11, 1915, p. 189.

[8] Pfaundler, L., *Annalen der Physik* (Leipzig), 4 Folge, Vol 129, 1868, p. 102.

[9] "Methods of Analyzing and Testing Coal and Coke," U.S. Bureau of Mines Bulletin 638, XMB-4, 1966, pp. 16–17.

AR301398

during the combustion period, and

$t_n - t$ = sum of $t_1, t_2, t_3 \ldots\ldots t_n - t$.

A1.1.5.3 *Bureau of Mines Method*—A table of radiation correction can be established so that only the initial and final readings are required to determine the heat value of any fuel. This may be done by carrying out a series of tests utilizing the procedure described in Section 10, using the following conditions. Regulate the amount of sample burned so that a series of determinations is made in which different temperature rises are obtained. For all determinations, keep the water jacket temperature constant, fire the bomb at the same initial temperature, and have the same time, $f - i$, elapse (±2 s) between the initial and final readings. Determine the radiation corrections for each of the series of temperature rises using the Dickinson method (see A1.1.5.1), or the Regnault-Pfaundler method (see A1.1.5.2). These corrections are constant for a given temperature rise. From the series of readings a table or graph is plotted to show radiation correction versus temperature rise. Once the table or graph is established, the radiation corrections can be obtained from it until there is a major change in the equipment.

APPENDIXES

(Nonmandatory Information)

X1. THERMOCHEMICAL CORRECTIONS

X1.1 *Energy of Formation of Nitric Acid*—A correction, e_1, (10.4.2 and 13.2) is applied for the acid titration. This correction is based on the assumptions (1) that all the acid titrated is HNO_3 formed by the following reaction: $\frac{1}{2} N_2 (g) + \frac{5}{4} O_2 (g) + \frac{1}{2} H_2O (l) = HNO_3$ (in 500 mol H_2O), and (2) that the energy of formation of HNO_3 in approximately 500 mol of water under bomb conditions is minus 59.0 kJ/mol.[16]

X1.1.1 A convenient concentration of Na_2CO_3 is 0.394 N (20.9 g Na_2CO_3/1000 mL) which gives $e_1 = 10$ multiply V, where V is the volume of Na_2CO_3 in millilitres. The factor 10.0 (0.394 × 59.0 ÷ 2.326) is to be used for calculating calorific value in Btu/lb. For other units see Table X2.1. When H_2SO_4 is also present, a part of the correction for H_2SO_4 is contained in the e_1 correction and the remainder in the e_3 correction.

X1.2 *Energy of Formation of Sulfuric Acid*—By definition (see Definitions D 121) the gross calorific value is obtained when the product of the combustion of sulfur in the sample is SO_2 (g). However, in actual bomb combustion processes, all the sulfur is found as H_2SO_4 in the bomb washings. A correction e_3 (see 13.2) is applied for the sulfur that is converted to H_2SO_4. This correction is based upon the energy of formation of H_2SO_4 in solutions, such as will be present in the bomb at the end of a combustion. This energy is taken as −295.0 kJ/mol.[17] A correction of 2 times 59.0 kJ/mol of sulfur was applied in the e_1 correction, so the additional correction necessary is 295.0 − (2 times 59.0) = 177 kJ/mol, or 5.52 kJ/g of sulfur in the sample (55.2 J times weight of sample in grams times percent sulfur in sample). This causes e_3 to be 23.7 times weight of samples in grams times percent sulfur in sample. The factor 23.7 (= 55.2/2.326) for e_3 (see 13.2) is to be used for calculating calorific value in Btu/lb. For other units, see Appendix X2. The values above are based on a coal containing about 5 % sulfur and about 5 % hydrogen. The assumption is also made that the H_2SO_4 is dissolved entirely in the water condensed during combustion of the sample.[18]

X1.2.1 If a 1-g sample of such a fuel is burned, the resulting H_2SO_4 condensed with water formed on the walls of the bomb will have a ratio of about 15 mol of water to 1 mol of H_2SO_4. For this concentration the energy of the reaction $SO_2 (g) + \frac{1}{2} O_2 (g) + H_2O (l) = H_2SO_4$ (in 15 mol of H_2O) under the conditions of the bomb process is −295 kJ/mol.[17] Basing the calculation upon a sample of comparatively large sulfur content reduces the possible overall errors, because, for small percentages of sulfur, the correction is smaller.

X1.3 *Fuse (Ignition) Wire*—Calculate the energy contributed by burning the fuse wire in accordance with the directions furnished by the supplier of the wire. For example, the energy of the combustion of No. 34 B & S gage Chromel C wire is 6.0 J/mg or approximately 0.95 J/mm. For calculating e_2 for use in Eqs 2 and 3, these give e_2 = 0.41 times length (mm) of wire or e_2 = 2.6 times weight (mg) of wire. The energy required to melt a platinum wire is constant for each experiment if the same amount of platinum wire is used. As the energy is small, its effect is essentially cancelled out in the relationship between the standardization experiments and the calorific value determinations, and it can be neglected. The factors listed above for e_2 (10.4.2 and 13.2) are suitable for calculating calorific value in Btu/lb. For other units, see Appendix X2.

[16] Calculated from data in National Bureau of Standards Technical Note 270-3.

[17] Calculated from data in National Bureau of Standards Circular 500.

[18] Hunt R. A., and Parker C., "Studies on Bomb Calorimetry IX—Formation of Sulfuric Acid," *Ind. Eng. Chem.*, Vol 37, 1945, p. 971.

AR301399

X2. REPORTING RESULTS IN OTHER UNITS

X2.1 *Reporting Results in Joules per Gram*

X2.1.1 The gross calorific value can be expressed in joules per gram, calories per gram, or British thermal units per pound. The relationships between these units are given in Table 1.

X2.1.2 Because the energy of combustion of the reference material is measured and certified by the National Bureau of Standards in joules per gram, the most straightforward usage of the reference material would lead to the calorific value of the fuel in joules per gram. To carry out this procedure, we make changes outlined in X2.1.3 through X2.1.5.

X2.1.3 For calculating energy equivalent, substitute Eq 2' for Eq 2:

$$E = [I(H'g) + e_1' + e_2']/t \qquad (2')$$

where the meanings of the symbols in Eq 2' are the same as in Eq 2 except that:

E' = energy equivalent, with units of joules per temperature unit,

H' = heat of combustion of reference material, with units of joules per gram weight in air (J/g from the certificate for the NBS benzoic acid), and

e_1', e_2', and e_3' = corrections, with units of joules (see Table X2.1).

X2.1.4 For calculating gross calorific value, substitute Eq 3' for Eq 3:

$$Q_v\,(\text{gross}) = [(tE') - e_4' - e_5' - e_6']/g \qquad (3')$$

where the meanings of the symbols in Eq 3' are the same as in Eq 3 except that:

Q_v (gross) = gross calorific value with units of joules per gram (weight in air),

E' = energy equivalent, with units of joules per temperature unit, and

e_4', e_5', and e_6' = corrections, with units of joules (see Table X2.1).

X2.1.5 *Precision.*

X2.1.5.1 *Repeatability*—Duplicate results by the same laboratory, using the same operator and equipment, should not be considered suspect unless they differ by more than 120 J/g.

X2.1.5.2 *Reproducibility*—The results submitted by two or more laboratories (different equipment, operators, date of test, and different portions of the same pulp) should not be considered suspect unless the results differ by more than 240 J/g.

TABLE X2.1 *Alternative Thermochemical Correction Factors (Results in Joules)*[A]

Correction	Multiplication Factor	Multiply By
e_1' (HNO_3)	20 J/mL	mL of 0.34 N Na_2CO_3
e_2' (H_2SO_4)	55.2 J/cg S	percentage of sulfur in sample times mass of sample in grams
e_3' (fuse wire) or	0.96 J/mm	length (mm) of No. 34 B & S gage Chromel C wire
e_3' (fuse wire)	1.14 J/mm	length (mm) of No. 34 B & S gage iron wire
e_3' (fuse wire) or	0.0 J/mg	mass (mg) of Chromel C wire
e_3' (fuse wire)	7.4 J/mg	mass (mg) of iron wire

[A] To be used in Eq 2' and 3' only.

The American Society for Testing and Materials takes no position regarding the validity of any patent rights asserted in connection with any item mentioned in this standard. Users of this standard are expressly advised that determination of the validity of any such patent rights, and the risk of infringement of such rights, are entirely their own responsibility.

This standard is subject to revision at any time by the responsible technical committee and must be reviewed every five years and if not revised, either reapproved or withdrawn. Your comments are invited either for revision of this standard or for additional standards and should be addressed to ASTM Headquarters. Your comments will receive careful consideration at a meeting of the responsible technical committee, which you may attend. If you feel that your comments have not received a fair hearing you should make your views known to the ASTM Committee on Standards, 1916 Race St., Philadelphia, PA 19103.

AR301400

f gO. 15 g of powdered K_2SO_4. of H_2SO_4. Place the flask in an n and heat gradually. Then boil solution clears. Continue boil- ional 30 min. Cool, add about ater, cool below 25°C, add 25 mL a and mix to precipitate the d pinch of zinc to prevent bump- k, and add a layer of NaOH fficient to make the contents e. Do not agitate the mixture. nect the flask to the digestion denser. Have the tip of the con- rsed in the H_3BO_3 solution (this sured) in the receiver and then o mix the contents thoroughly. e ammonia has distilled (at least stillate). Titrate with standard acid icator to violet end point.

the percentage nitrogen as fol-

ed), % = $(A \times B) \times 0.14$

of 0.1 N to 0.3 N H_2SO_4 re- titration of the solution, and lity of the H_2SO_4.

the nearest 0.1 % the nitrogen as-received sample.

d Accuracy

ision of this method has not ed. Data are being sought that le for use in developing precision

e validity of any patent rights asserted in ly advised that determination of the validity d responsibility.

ewed and must be reviewed every five years or revision of this standard or for additional ive careful consideration at a meeting of the e not received a fair hearing you should hia, Pa. 19103.

Designation: D 2974 – 84

Vol. 04.08

Standard Test Methods for MOISTURE, ASH, AND ORGANIC MATTER OF PEAT MATERIALS[1]

This standard is issued under the fixed designation D 2974; the number immediately following the designation indicates the year of original adoption or, in the case of revision, the year of last revision. A number in parentheses indicates the year of last reapproval. A superscript epsilon (ε) indicates an editorial change since the last revision or reapproval.

1. Scope

1.1 These test methods[2] cover measurement of the weight percentage of moisture, ash, and organic matter in peat materials, including moss, humus, and reed-sedge types.

1.2 *This standard may involve hazardous materials, operations, and equipment. This standard does not purport to address all of the safety problems associated with its use. It is the responsibility of whoever uses this standard to consult and establish appropriate safety and health practices and determine the applicability of regulatory limitations prior to use.*

2. Summary of Methods

2.1 *Method I*—Moisture is determined by drying a peat sample at 105°C. The loss in weight represents the total moisture content expressed as percentage by weight of the as-received sample.

2.2 *Method II*—This is an alternative moisture method which removes the total moisture in two steps: (*1*) evaporation of moisture by air at room temperature (air-drying) and (*2*) the subsequent loss in weight of the air-dried sample at 105°C. This method provides a more stable sample, the air-dried sample, when tests for nitrogen, pH, cation exchange, sand content, etc., are to be made.

2.3 Ash content of a peat sample is determined by igniting the oven-dried sample from the total moisture determination in a muffle furnance at 550°C. The substance remaining after ignition is the ash, and this includes mineral impurities such as sand. The ash content is expressed as a weight percentage of the oven-dried sample.

2.4 Organic matter is determined by difference.

3. Apparatus

3.1 *Oven*, regulated to a constant temperature of 105 ± 5°C.

3.2 *Muffle Furnace*, regulated to a constant temperature of 550°C.

3.3 *Evaporating Dishes*, high silica or porcelain, not less than 75-mL capacity.

3.4 *Blender*, high-speed.

3.5 *Aluminum Foil*, heavy-duty.

3.6 *Porcelain pan, spoons, etc.*

4. Preparation of Sample

4.1 Place a representative field sample on a square rubber sheet, paper, or oil cloth. Reduce the sample to the quantity required by quartering and place in a moistureproof container. *Work rapidly to prevent moisture losses.*

MOISTURE

5. Procedure—Method I

5.1 Mix the sample thoroughly and place a test specimen of at least 50 g in an ignited and weighed (with fitted heavy-duty aluminum foil cover) high silica or porcelain evaporating dish of not less than 100 mL capacity. Crush soft lumps with a spoon or spatula. Cover immediately with the aluminum foil and weigh to the nearest 0.01 g. Dry uncovered for 16 h at 105°C. Remove from the oven, cover tightly, cool, and weigh.

[1] These test methods are under the jurisdiction of ASTM Committee D-18 on Soil and Rock and are the direct responsibility of Subcommittee D18.18 on Peats and Related Materials.

Current edition approved Oct. 26, 1984. Published December 1984. Originally published as D 2974 – 71. Last previous edition D 2974 – 71.

[2] These test methods are currently undergoing an extensive review by Committee D-18.

AR301401

6. Calculation

6.1 Calculate the moisture content as follows:

$$\text{Moisture, \%} = [(A - B) \times 100]/A$$

where:

A = grams of as-received test specimen, and
B = grams of oven-dried test specimen.

NOTE—In geotechnical engineering the moisture content is commonly expressed as a proportion of the oven-dried mass. Care must be taken to indicate which system is being used.

7. Procedure—Method II

7.1 Use Method II when pH, nitrogen, sand content, cation exchange capacity, etc., are to be tested. Mix thoroughly and weigh a 100 to 300-g representative sample and spread evenly on a large flat pan. Crush soft lumps with a spoon or spatula and let the sample come to moisture equilibrium with room air, not less than 24 h. Stir occasionally to maintain maximum air exposure of the entire sample. When the weight is constant, calculate the loss in weight as percent moisture removed by air drying. Grind a representative portion of the air-dried sample 1 to 2 min in a high-speed blender. Use the ground portion for moisture, ash, nitrogen, etc., determinations.

7.2 Thoroughly mix the air-dried, ground sample and weigh to the nearest 0.01 g the equivalent of 50 g of test specimen on the as-received basis. Determine the grams of air-dried sample equivalent to 50 g of as-received sample as follows:

$$\text{Equivalent sample weight, g} = 50.0 - [(50 \times \text{percent moisture removed in air drying})/100]$$

Place the weighed sample in an ignited and weighed (with fitted heavy-duty aluminum foil cover) high silica or porcelain evaporating dish and proceed as in Method I.

8. Calculation

8.1 Calculate the moisture content as follows:

$$\text{Moisture, \%} = (50 - B) \times 2$$

where:

B = grams of oven-dried sample.

ASH

9. Procedure

9.1 Place an uncovered (retain cover for weighing) high silica or porcelain dish containing the dried test specimen from the moisture determinations in a muffle furnace. Gradually bring to 550°C and hold until completely ashed. Cover with the retained aluminum foil cover, cool, and weigh.

10. Calculation

10.1 Calculate the ash content as follows:

$$\text{Ash, \%} = (C \times 100)/B$$

where:

C = grams of ash, and
B = grams of oven-dried test specimen.

ORGANIC MATTER

11. Procedure

11.1 Determine the amount of organic matter by difference, as follows:

$$\text{Organic matter, \%} = 100.0 - D$$

where:

D = weight percentage of ash.

REPORT

12. Report

12.1 Report all results to the nearest 0.1 %.

12.2 Indicate whether moisture contents are by proportion of as-received mass or oven-dried mass.

13. Precision and Bias

13.1 The precision and bias of these test methods have not been determined. Data are being sought for use in developing a precision and bias statement.

The American Society for Testing and Materials takes no position respecting the validity of any patent rights asserted in connection with any item mentioned in this standard. Users of this standard are expressly advised that determination of the validity of any such patent rights, and the risk of infringement of such rights, are entirely their own responsibility.

This standard is subject to revision at any time by the responsible technical committee and must be reviewed every five years and if not revised, either reapproved or withdrawn. Your comments are invited either for revision of this standard or for additional standards and should be addressed to ASTM Headquarters. Your comments will receive careful consideration at a meeting of the responsible technical committee, which you may attend. If you feel that your comments have not received a fair hearing you should make your views known to the ASTM Committee on Standards, 1916 Race St., Philadelphia, Pa. 19103.

Standard Test Meth
SAND CONTENT

This test method covers determi
peat.

Formerly under the jurisdiction
This test method was withdrawn

AR301402

CARBON, TOTAL ORGANIC AND INORGANIC

Carbon may exist in sediment and water samples as either inorganic or organic compounds. Inorganic carbon is present as carbonates, bicarbonates, and possibly free carbon dioxide. Specific types of compounds that are considered to be included in the organic carbon fraction are nonvolatile organic compounds (sugars), volatile organic compounds (mercaptans), partially volatile compounds (oils), and particulate carbonaceous materials (cellulose).[1,2*]

The basis of the method is the catalytic or chemical oxidation of carbon in carbon-containing compounds to carbon dioxide followed by the quantification of the carbon dioxide produced. Alternately, the carbon may be reduced to methane and appropriately quantified. It follows, then, that the distinction between inorganic carbon and organic carbon is the method of sample pretreatment. There are presently two procedures for defining this separation. One method is based on sample treatment with a strong acid. Analysis of an untreated sample is a measure of total carbon while analysis of the acid-treated fraction is a measure of organic carbon. Inorganic carbon is calculated by subtraction. The second method of separation is based on differential thermal combustion with organic compounds being converted to carbon dioxide at 500°C to 650°C[3,4] and inorganic carbon being converted to carbon dioxide at 950°C to 1300°C.[4,5]

Sample Handling and Storage

Flowcharts for the handling of samples intended for organic carbon and inorganic carbon analysis are presented in Figure 3-6 and Figure 3-7. Water and sediment samples to be analyzed for inorganic carbon may be stored in glass or plastic containers. There is no effective preservative because of the carbon dioxide reserve in the atmosphere. The only precaution that can be taken for inorganic

---

* References for this procedure can be found on page 3-76.

AR301403

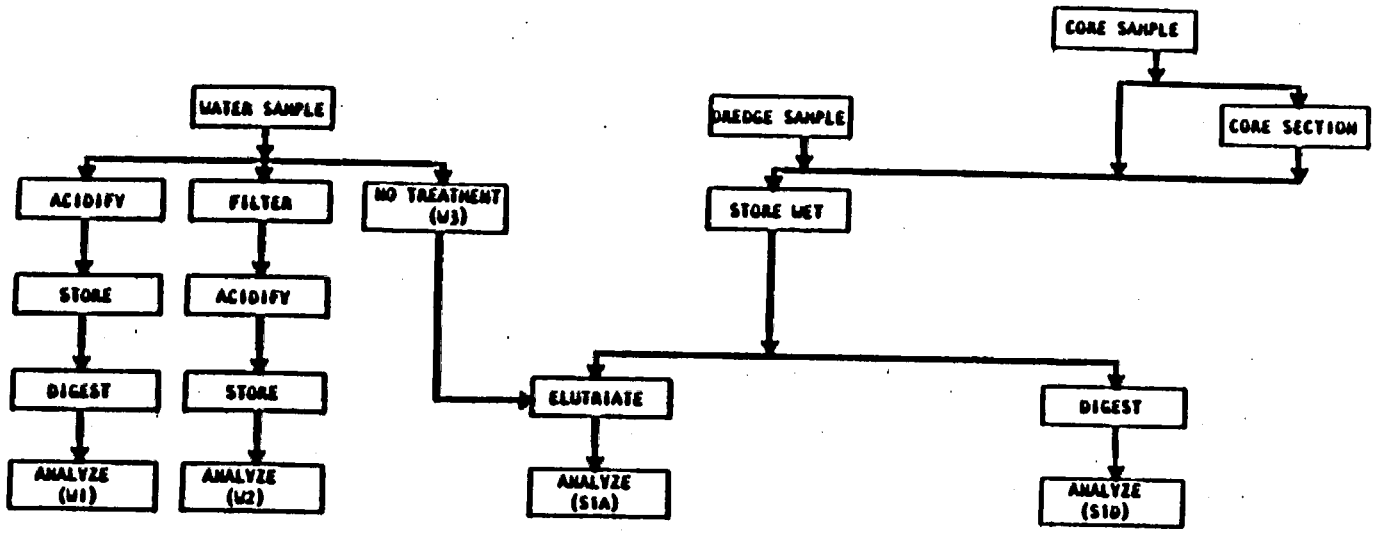

SAMPLE DESIGNATION	W1	W2	W3	S1A	S1B	S1C	S1D	S2	S3
PURPOSE	Total Water Conc.	Soluble Water Conc.	Used in Elutriate	Mobile Conc.			Total Sediment Conc.		
CONTAINER	G,P	G,P	G,P	G,P			G,P		
SAMPLE TREATMENT	None	Filter	None	None			None		
PRESERVATIVE	4°C (Minimize Air Contact.)	4°C	4°C	4°C (Minimize Air Contact. Keep Field Moist.)			4°C		
STORAGE TIME	24 hr	24 hr	-	24 hr					
DIGESTION SOLUTION									
SAMPLE VOLUME OR WEIGHT	100 ml	100 ml	-	100 ml			1 g		

Figure 3-6. Handling and storage of samples for total inorganic carbon analysis

AR301404

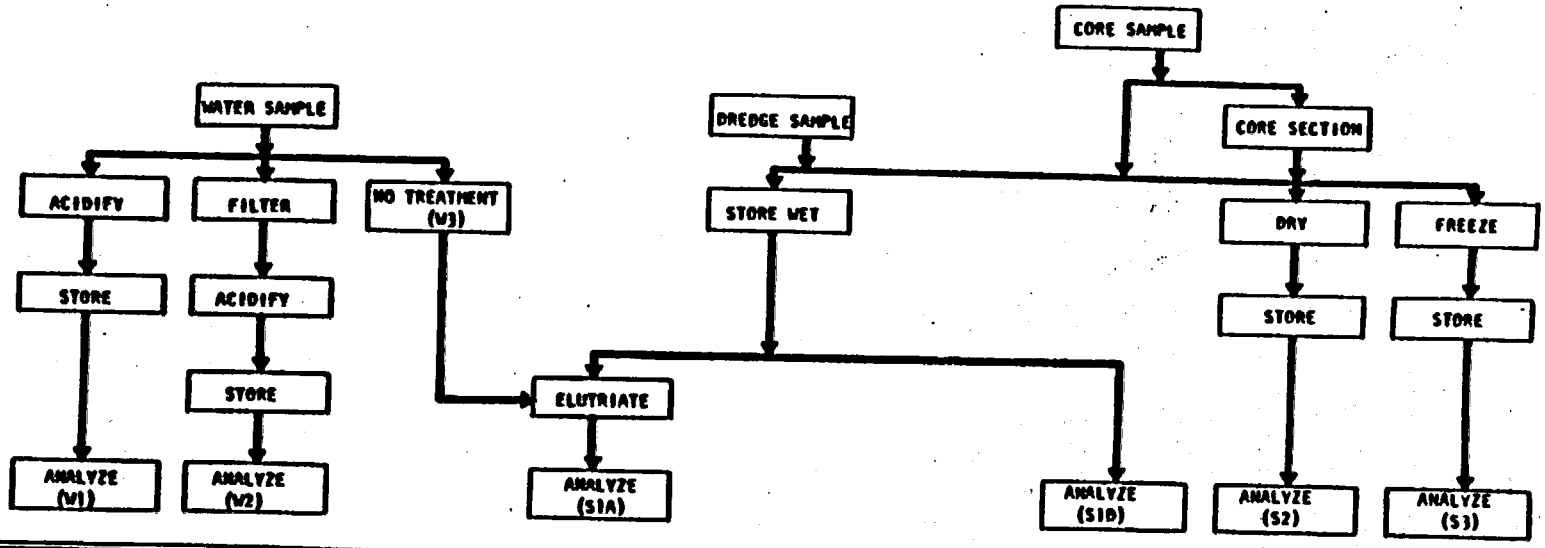

SAMPLE DESIGNATION	W1	W2	W3	S1A	S1D	S2	S3
PURPOSE	Total Water Conc.	Soluble Water Conc.	Used in Elutriate	Mobile Conc.	Total Sediment Conc.	Total Sediment Conc.	Total Sediment Conc.
CONTAINER	G	G	G	G,P	G,P	G,P	G,P
SAMPLE TREATMENT	None	Filter	None	None	None	Air dry	Freeze
PRESERVATIVE	HCl or H_2SO_4 to pH2 4°C	HCl or H_2SO_4 to pH2 4°C	4°C	4°C	4°C	None	None
STORAGE TIME	24 hr	24 hr	<1w	<1w	-	-	-
SAMPLE VOLUME OR WEIGHT	30-100 ml	30-100 ml	Variable		0.5-5.0 g	0.5-5.0 g	0.5-5.0 g

Figure 3-7. Handling and storage of samples for total organic carbon analysis

AR301405

carbon is to completely fill the sample container at the time of sampling (exclude all air bubbles), tightly seal the container, and complete the analysis immediately (Figure 3-6).

Water samples for organic carbon analysis should be stored in glass containers unless substitute containers have been shown not to affect total organic carbon (TOC) analyses. Samples should be processed as soon as possible (within 24 hr if possible) to minimize change due to chemical or biological oxidation. Atmospheric uptake of carbon dioxide is less critical since it would be evolved when the sample is acidified prior to analysis. Sediment samples for organic carbon analysis may be stored in either plastic or glass containers (Figure 3-7). Air drying of sediments (S2) may lead to low TOC results due to oxidation or volatilization. Therefore, moist storage (S1D) or frozen storage (S3) would be the preferred method of storage. If samples are frozen, excessive temperatures should not be used to thaw the samples.

AR301406

Procedure for Water Samples (W1, W2, S1A)

Method 1: Infrared Analysis[6,7]

Apparatus

Sample homogenizer such as a Waring blender or ultrasonic blender

Magnetic stirrer

Hypodermic syringe

Total carbon analyzer, either a single channel or a dual channel instrument (Dow-Beckman Carbonaceous Analyzer Model No. 915, Dohrmann Envirotech DC-50 carbon analyzer, Oceanography International Total Carbon Analyzer, Leco, or equivalent)

Reagents

Distilled water: the distilled water used in the preparation of standards and dilution of samples should be of the highest quality in order to have a small blank.

Organic carbon, stock solution, 1000 mg/ℓ C: dissolve 2.125 g anhydrous potassium biphthalate, $KHC_8H_4O_4$, in distilled water and dilute to 1 ℓ in a volumetric flask.

Organic carbon, standard solutions: prepare standard solution by dilution of the stock solution as required.

Inorganic carbon, stock solution, 1000 mg/ℓ: dissolve 3.500 g sodium bicarbonate, $NaHCO_3$, and 4.418 g sodium carbonate, Na_2CO_3, in distilled water in a 1-ℓ volumetric flask and make up to the mark.

Inorganic carbon, standard solution: prepare standards from the stock solution as required.

Packing for total carbon tube: dissolve 20 g cobalt nitrate, $Co(NO_3)_2 \cdot 6H_2O$, in 50 ml distilled water. Add this solution to 15 g long-fiber asbestos in a porcelain evaporating dish. Mix and evaporate to dryness on a steam bath. Place the dish in a muffle furnace and bring to 950°C. After 1 to 2 hr at this temperature, remove the dish and allow to cool. Break up any large lumps and mix adequately but not excessively. With the combustion tube held in a vertical position, taper joint up, put about 1/2 in. of untreated asbestos in the tube first, then transfer in small amounts, approximately 1 g of catalyst into the tube with forceps or tweezers. As it is added, tap or push the material gently with a 1/4-in. glass rod. Do not force the packing. The weight of the rod itself is sufficient to compress the material. When completed, the length of the packing should be about 5 cm or 6 cm. Test the packed tube by measuring the flow rate of

A631407

gas through it at room temperature, and then at 750°C. The rate should not drop more than 20 percent.

Packing for carbonate tube (dual channel instrument): place a small wad of quartz wool or asbestos near the exit end of the carbonate evolution tube. From the entrance end add 6 to 12 mesh quartz chips, allowing these to collect against the wad to a length of 10 cm. Pour an excess of 85 percent phosphoric acid, H_3PO_4, into the tube while holding it vertically and allow the excess to drain out.

Nitrogen gas, carbon dioxide free.

Procedure

Turn on the infrared analyzer, recorder, and tube furnaces, setting the total carbon furnace at 950°C and the carbonate furnace at 175°C. Allow sufficient warm-up time for stable, drift-free operation; about 2 hr is required. If used daily, the analyzer can be left on continuously. Adjust the oxygen flow rate to 80 to 100 ml/min through the total carbon tube. With other instruments, follow manufacturer's directions to warm up the instrument.

Immediately prior to carrying out calibrations or analyses, inject several portions of the appropriate standard into the tube to be used, until constant readings are obtained. The actual injection technique is as follows: rinse the syringe several times with the solution to be analyzed, fill, and adjust the volume to be pipeted. Wipe off the excess with soft paper tissue, taking care that no lint adheres to the needle. Remove the plug from the syringe holder, insert the sample syringe, and inject the sample into the combustion tube with a single, rapid movement of the thumb. Leave the syringe in the holder until the flow rate returns to normal, then replace it with the plug.

Successively introduce a convenient sized aliquot (20 to 50 µl) of each organic carbon standard and a blank into the total carbon tube and record peak heights. Between injections allow the recorder pen to return to its baseline. When a dual channel instrument is used, the standardization procedure must be repeated using carbonate standards to calibrate the low temperature channel.

Thoroughly mix the sample. Inject a convenient sized aliquot (20 to 50 µl) of the sample into the total carbon tube and

AR301408

record the peak height. This result is a measure of the organic carbon concentration and the inorganic carbon concentration of the sample.

Thoroughly mix the sample using a Waring blender or an ultrasonic homogenizer. Transfer 10 to 15 ml of sample to a 30-ml beaker and acidify with concentrated HCl to a pH of 2 or less. Purge the sample with carbon dioxide free nitrogen gas for 5 to 10 min. Plastic tubing should not be used during the purging process unless it has been previously shown that it will not add organic carbon to the sample.

Mix the acidified sample on a magnetic stirrer. While stirring, withdraw a subsample from the beaker using a hypodermic needle with a 150-μm opening. Inject the sample into the carbon analyzer to be used and record the peak height. This result is a measure of the organic carbon concentration of the sample.

Using either clear or filtered water samples, analytical precision will approach 1 to 2 percent or 1 to 2 mg/l carbon, whichever is greater. Analytical precision for unfiltered water samples will increase to 5 to 10 percent because of the difficulty associated with sampling particulate matter and the fact that the needle opening of the syringe limits the maximum size of the particles that can be included in the sample.

Calculations

Dual-channel instrument. Prepare calibration curves derived from the peak heights obtained with the standard total carbon and inorganic carbon solutions.

Determine the concentration of total carbon and inorganic carbon in the sample by comparing sample peak heights with the calibration curves.

Determine the concentration of total inorganic carbon in the sample by subtracting the organic carbon value from the total carbon value.

Single-channel instrument. Prepare a calibration curve derived from the peak heights obtained with the standard total carbon solutions. Determine the total carbon concentration in the sample by comparing the peak height of the first sample injection with the

AR301409

calibration curve. Determine the organic carbon concentration in the sample by comparing the peak height of the second sample injection with the calibration curve. Inorganic carbon concentrations are calculated by subtracting the organic carbon concentration from the total carbon concentration.

AR301410

Procedures for Sediment Samples (S1D, S3)

Method 1: Sample Ignition

Apparatus

Induction furnace such as the Leco WR-12, Dohrmann DC-50, Coleman CH analyzer, or Perkin Elmer 240 elemental analyzer

Combustion boats

Microbalance

Desiccator

Reagents

10 percent hydrochloric acid: mix 100 ml concentrated HCl with 900 ml distilled water.

Copper oxide fines.

Benzoic acid.

Procedure

Dry at 70°C and grind the sediment sample.

Weigh a combustion boat and record the weight. Place 0.2 to 0.5 g homogenized sediment in the combustion boat and reweigh. Combustion boats should not be handled with the bare hand during this process.

If total carbon or inorganic carbon is to be determined, Cupric oxide fines may be added to the sample to assist in combustion. Combust the sample in an induction furnace. Record the result as total carbon.

If organic carbon is to be determined, treat a known weight of dried sediment with several drops of 10 percent HCl. Wait until the effervescing is completed and add more acid. Continue this process until the incremental addition of acid causes no further effervescence. Do not add too much acid at one time as this may cause loss of sample due to frothing.

Dry the sample at 70°C and place in a desiccator. Add Cupric oxide fines, combust the sample in an induction furnace, and record the result as organic carbon.

AR301411

Calculations

The carbon content of the sample can be calculated as:

$$\%C = \frac{\text{weight of tube (after-before)}}{\text{sample weight}} \times 27.29$$

Derivation of factor:

$$27.29 = \frac{12.011 \text{ (molecular weight carbon)}}{44.011 \text{ (molecular weight carbon dioxide)}} \times 100\%$$

When the total sample results are used, the result is percent carbon in the sample. When acid-treated samples are used, the result is percent organic carbon. Inorganic carbon is calculated as total carbon minus organic carbon.

Method 2: Differential Combustion[4,5]

Apparatus

Sargent programmed microcombustion apparatus or equivalent

Microbalance

Procedure

Air dry the sediment sample. Using a mortar and pestle, grind the sample to pass a 100-mesh screen.

Combust a known weight of sediment at a programmed heating rate of 300° to 950°C in 10 min and then maintain 950°C for 20 min. Trap the CO_2 in ascarite and record the weight as total carbon. A sample size should be selected that will produce 25 to 50 mg CO_2.

Weigh a second portion of the dried sediment. Combust this sample at a programmed rate of 300° to 650°C in 10 min and maintain 650°C for 20 min. Trap the CO_2 in ascarite and record the weight as organic carbon.

Calculations

The total carbon concentration, C_t, of the sample (in mg/g) is calculated as follows:

$$C_t = \frac{(x_t)\left(\frac{12}{44}\right)}{(g)}$$

where

x_t = weight of CO_2 evolved at 950°C, mg

AR301412

g = weight of sample combusted, g

The organic carbon, C_o, concentration of the sample (in mg/g) is calculated as follows:

$$C_o = \frac{(x_o)\ (\frac{12}{44})}{(g)}$$

where

x_o = weight of CO_2 evolved at 650°C, mg

g = weight of sample combusted, g

Inorganic carbon, C_I, (in mg/g) is calculated as:

$$C_I = C_t - C_o$$

Method 3: Wet Combustion[4,8]

A third method has been used for carbon in sediments. This is based on the oxidation of the sample with dichromate and back titration of the sample with ferrous ammonium sulfate. References are provided for the procedure but details are not given. The procedure is similar to the chemical oxygen demand test which is not specific for carbon. The wet combustion method is a redox procedure and any reduced chemicals in the sediment samples (ferrous iron, manganous manganese, sulfide) will react with the dichromate. Therefore, this procedure is not recommended unless other instrumentation is not available.

AR301413

References

1. U. S. Environmental Protection Agency. "Manual of Methods for Chemical Analysis of Water and Wastes." Methods Development and Quality Assurance Research Laboratory, National Environmental Research Center; Cincinnati, Ohio. 298 p. (1974).

2. U. S. Environmental Protection Agency. "Methods for Chemical Analysis of Water and Wastes." Environmental Monitoring and Support Laboratory, Office of Research and Development, EPA; Cincinnati, Ohio (1979).

3. Giovannini, G., Poggio, G., and Sequi, P. "Use of an Automatic CHN Analyzer to Determine Organic and Inorganic Carbon in Soils." Unpublished Report, Laboratory of Soil Chemistry, via Corridoni, Pisa, Italy. 9 p. (1975).

4. Konrad, J. G., Chesters, G., and Keeney, D. R. "Determination of Organic- and Carbonate-Carbon in Freshwater Lake Sediments by a Microcombustion Procedure." J. Thermal Analysis 2:199-208 (1970).

5. Kemp, A. L. W. "Organic Matter in the Sediments of Lakes Ontario and Erie." Proc. 12th Conference Great Lakes Research 12:237-249 (1969).

6. Environment Canada. "Analytical Methods Manual," Inland Waters Directorate, Water Quality Branch; Ottawa, Canada (1974).

7. American Public Health Association. Standard Methods for the Examination of Water and Wastewater. APHA; New York, New York. 1193 p. (1976).

8. Gaudette, H. E., Flight, W. R., Toner, L., and Folger, D. W. "An Inexpensive Titration Method for the Determination of Organic Carbon in Recent Sediments." J. Sed. Petrology 44:249-253 (1974).

AR301414

553 09 04

Ebasco Services Incorporated
REM III Program
Zone Program Management Office
2000 15th Street North
Arlington, VA 22201
Phone: (703) 558-7555

REM III SAS No.

REM III TEAM LABORATORY
SPECIAL ANALYTICAL SERVICES
Regional Office Request

[ ] Regional Transmittal [ ] Telephone Request

A. Regional Office: NUS-Pittsburgh and Site Name: Croydon TCE

B. Regional Laboratory Service Coordinator: Greg Zimmerman

C. Telephone Number: (412) 788-1080

D. Date of Request: September 22, 1988

Please provide below a description of your request for Special Analytical Services under the REM III Program. In order to most efficiently obtain capability for your request, please address the following considerations, if applicable. Incomplete or erroneous information may result in delay in processing your request. Provide response on additional sheets or attach supplementary information as needed.

1. General description of analytical service requested: Analysis of 7 sediment samples for TOC, and Grain Size Distribution.

2. Definition and number of work units involved (specify whether whole samples or fractions; whether organics or inorganics; whether aqueous or soil and sediments; or whether low, medium, or high concentration: 7 low concentration sediment samples.

3. Purpose of analysis (specify whether Remedial or Enforcement Action, RCRA, NPDES, etc.): RI/FS

4. Data Quality Objectives (specify whether screening analysis, engineering support or confirmational analysis): Engineering Support DQO Level III.

5. Estimated date(s) of collection: November 14 - 18, 1988

6. Estimated date(s) and method of shipment: November 14 - 18, 1988. Samples will be shipped by overnight air carrier. These dates are tentative and are dependent on the project remaining on schedule.

7. Approximate number of days results are required after receipt of samples by laboratory: 40 days

8. Analytical protocol required (attach copy if protocol other than currently approved under this contract or CLP program):
Grain Size Distribution - ASTM D 422-63
TOC - page 3-73 from "Procedures for Handling and Chemical Analysis of Sediment and Water Samples", EPA, May 1981.

All methods are attached.

9. Special technical instructions (if outside protocol requirements, specify compound names, detection limits, etc.):

10. Analytical results required (if known, specify format for data sheets, QA/QC reports, chain-of-custody, documentation, etc.). If not completed, format of results will be left to discretion of the laboratory: Data sheets, chain-of-custody forms, all calculations, and SAS Request Form.

11. Other instructions (use additional sheets or attach supplementary information, as needed):

AR301417

12. Name of sampling/shipping contact: Greg Zimmerman

Phone: (412) 788-1080

AR301418

I. DATA REQUIREMENTS

PARAMETER	mg/l DETECTION LIMIT	PRECISION DESIRED (+ % or Conc.)
Grain Size	Not Specified	Not Specified
TOC	Not Specified	Not Specified

II. QUALITY CONTROL REQUIREMENTS

SAMPLES CONTROL REQUIRED	CONTROL FREQUENCY OF SAMPLES	PRECISION DESIRED LIMITS (+ or Conc.)
None Specified		

III. ACTION REQUIRED IF LIMITS ARE EXCEEDED:

None Specified

Designation: D 422 - 63 (Reapproved 1972)[ε1]

Standard Method for Particle-Size Analysis of Soils[1]

This standard is issued under the fixed designation D 422; the number immediately following the designation indicates the year of original adoption or, in the case of revision, the year of last revision. A number in parentheses indicates the year of last reapproval. A superscript epsilon (ε) indicates an editorial change since the last revision or reapproval.

[ε1] NOTE—Section 2 was added editorially and subsequent sections renumbered in July 1984.

1. Scope

1.1 This method covers the quantitative determination of the distribution of particle sizes in soils. The distribution of particle sizes larger than 75 μm (retained on the No. 200 sieve) is determined by sieving, while the distribution of particle sizes smaller than 75 μm is determined by a sedimentation process, using a hydrometer to secure the necessary data (Notes 1 and 2).

NOTE 1—Separation may be made on the No. 4 (4.75-mm), No. 40 (425-μm), or No. 200 (75-μm) sieve instead of the No. 10. For whatever sieve used, the size shall be indicated in the report.

NOTE 2—Two types of dispersion devices are provided: (*1*) a high-speed mechanical stirrer, and (*2*) air dispersion. Extensive investigations indicate that air-dispersion devices produce a more positive dispersion of plastic soils below the 20-μm size and appreciably less degradation on all sizes when used with sandy soils. Because of the definite advantages favoring air dispersion, its use is recommended. The results from the two types of devices differ in magnitude, depending upon soil type, leading to marked differences in particle size distribution, especially for sizes finer than 20 μm.

2. Referenced Documents

2.1 *ASTM Standards:*

D 421 Practice for Dry Preparation of Soil Samples for Particle-Size Analysis and Determination of Soil Constants[2]

E 11 Specification for Wire-Cloth Sieves for Testing Purposes[3]

E 100 Specification for ASTM Hydrometers[4]

3. Apparatus

3.1 *Balances*—A balance sensitive to 0.01 g for weighing the material passing a No. 10 (2.00-mm) sieve, and a balance sensitive to 0.1 % of the mass of the sample to be weighed for weighing the material retained on a No. 10 sieve.

3.2 *Stirring Apparatus*—Either apparatus A or B may be used.

3.2.1 Apparatus A shall consist of a mechanically operated stirring device in which a suitably mounted electric motor turns a vertical shaft at a speed of not less than 10 000 rpm without load. The shaft shall be equipped with a replaceable stirring paddle made of metal, plastic, or hard rubber, as shown in Fig. 1. The shaft shall be of such length that the stirring paddle will operate not less than ¾ in. (19.0 mm) nor more than 1½ in. (38.1 mm) above the bottom of the dispersion cup. A special dispersion cup conforming to either of the designs shown in Fig. 2 shall be provided to hold the sample while it is being dispersed.

3.2.2 Apparatus B shall consist of an air-jet dispersion cup[5] (Note 3) conforming to the general details shown in Fig. 3 (Notes 4 and 5).

NOTE 3—The amount of air required by an air-jet dispersion cup is of the order of 2 ft^3/min; some small air compressors are not capable of supplying sufficient air to operate a cup.

NOTE 4—Another air-type dispersion device, known as a dispersion tube, developed by Chu and Davidson at Iowa State College, has been shown to give results equivalent to those secured by the air-jet dispersion cups. When it is used, soaking of the sample can be done in the sedimentation cylinder, thus eliminating the need for transferring the slurry. When the air-dispersion tube is used, it shall be so indicated in the report.

NOTE 5—Water may condense in air lines when not in use. This water must be removed, either by using a water trap on the air line, or by blowing the water out of the line before using any of the air for dispersion purposes.

3.3 *Hydrometer*—An ASTM hydrometer, graduated to read in either specific gravity of the suspension or grams per litre of suspension, and conforming to the requirements for hydrometers 151H or 152H in Specifications E 100. Dimensions of both hydrometers are the same, the scale being the only item of difference.

3.4 *Sedimentation Cylinder*—A glass cylinder essentially 18 in. (457 mm) in height and 2½ in. (63.5 mm) in diameter, and marked for a volume of 1000 mL. The inside diameter shall be such that the 1000-mL mark is 36 ± 2 cm from the bottom on the inside.

3.5 *Thermometer*—A thermometer accurate to 1°F (0.5°C).

3.6 *Sieves*—A series of sieves, of square-mesh woven-wire cloth, conforming to the requirements of Specification E 11. A full set of sieves includes the following (Note 6):

[1] This method is under the jurisdiction of ASTM Committee D-18 on Soil and Rock and is the direct responsibility of Subcommittee D18.03 on Texture, Plasticity, and Density Characteristics of Soils.

Current edition approved Nov. 21, 1963. Originally published 1935. Replaces D 422 - 62.

[2] *Annual Book of ASTM Standards*, Vol 04.08.

[3] *Annual Book of ASTM Standards*, Vol 14.02.

[4] *Annual Book of ASTM Standards*, Vol 14.01.

[5] Detailed working drawings for this cup are available at a nominal cost from the American Society for Testing and Materials, 1916 Race St., Philadelphia, Pa. 19103. Order Adjunct No. 12-404220-00.

AR301420

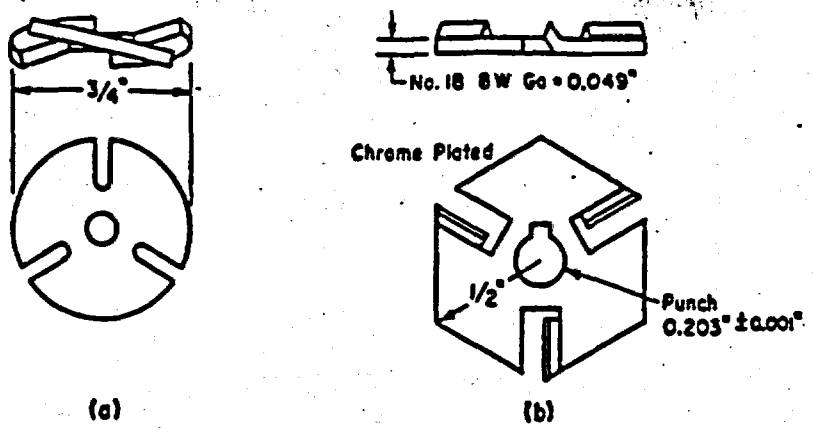

Metric Equivalents

in.	0.001	0.049	0.203	½	¾
mm	0.03	1.24	5.16	12.7	19.0

FIG. 1 Detail of Stirring Paddles

3-in. (75-mm)	No. 10 (2.00-mm)
2-in. (50-mm)	No. 20 (850-µm)
1½-in. (37.5-mm)	No. 40 (425-µm)
1-in. (25.0-mm)	No. 60 (250-µm)
¾-in. (19.0-mm)	No. 140 (106-µm)
⅜-in. (9.5-mm)	No. 200 (75-µm)
No. 4 (4.75-mm)	

NOTE 6—A set of sieves giving uniform spacing of points for the graph, as required in Section 17, may be used if desired. This set consists of the following sieves:

3-in. (75-mm)	No. 16 (1.18-mm)
1½-in. (37.5-mm)	No. 30 (600-µm)
¾-in. (19.0-mm)	No. 50 (300-µm)
⅜-in. (9.5-mm)	No. 100 (150-µm)
No. 4 (4.75-mm)	No. 200 (75-µm)
No. 8 (2.36-mm)	

3.7 *Water Bath or Constant-Temperature Room*—A water bath or constant-temperature room for maintaining the soil suspension at a constant temperature during the hydrometer analysis. A satisfactory water tank is an insulated tank that maintains the temperature of the suspension at a convenient constant temperature at or near 68°F (20°C). Such a device is illustrated in Fig. 4. In cases where the work is performed in a room at an automatically controlled constant temperature, the water bath is not necessary.

3.8 *Beaker*—A beaker of 250-mL capacity.

3.9 *Timing Device*—A watch or clock with a second hand.

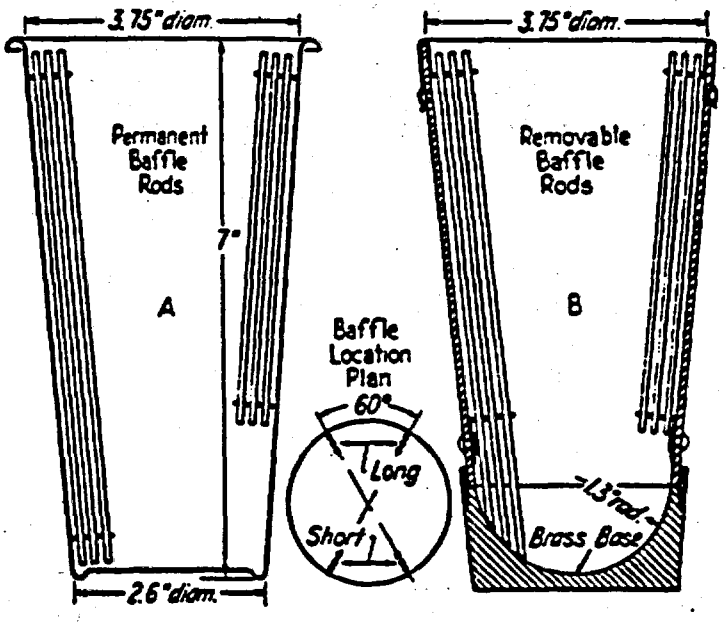

Metric Equivalents

in.	1.3	2.6	3.75
mm	33	66	95.2

FIG. 2 Dispersion Cups of Apparatus

4. Dispersing Agent

4.1 A solution of sodium hexametaphosphate (sometimes called sodium metaphosphate) shall be used in distilled or demineralized water, at the rate of 40 g of sodium hexametaphosphate/litre of solution (Note 7).

NOTE 7—Solutions of this salt, if acidic, slowly revert or hydrolyze back to the orthophosphate form with a resultant decrease in dispersive action. Solutions should be prepared frequently (at least once a month) and adjusted to pH of 8 or 9 by means of sodium carbonate. Bottles containing solutions should have the date of preparation marked on them.

4.2 All water used shall be either distilled or demineralized water. The water for a hydrometer test shall be brought to the temperature that is expected to prevail during the hydrometer test. For example, if the sedimentation cylinder is to be placed in the water bath, the distilled or demineralized water to be used shall be brought to the temperature of the controlled water bath; or, if the sedimentation cylinder is used in a room with controlled temperature, the water for the test shall be at the temperature of the room. The basic temperature for the hydrometer test is 68°F (20°C). Small variations of temperature do not introduce differences that are of practical significance and do not prevent the use of corrections derived as prescribed.

AR 301421

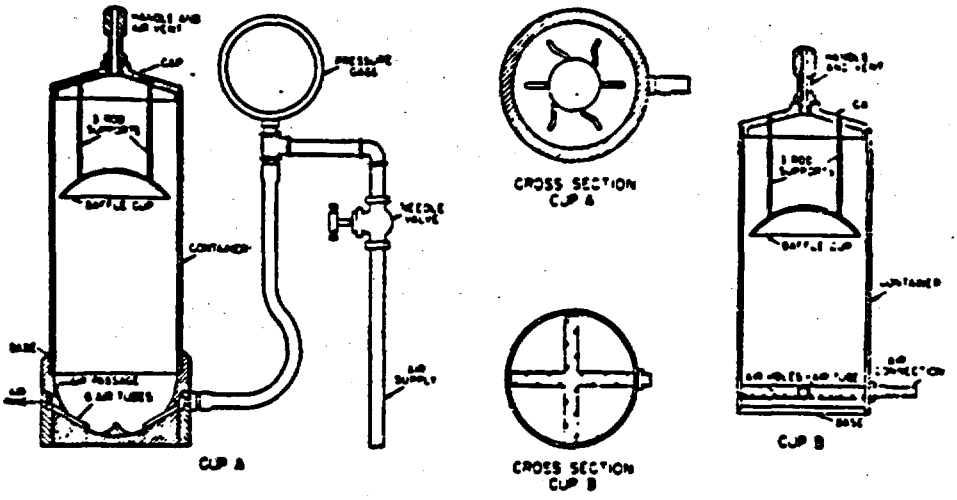

FIG. 3 Air-Jet Dispersion Cups of Apparatus B

5. Test Sample

5.1 Prepare the test sample for mechanical analysis as outlined in Practice D 421. During the preparation procedure the sample is divided into two portions. One portion contains only particles retained on the No. 10 (2.00-mm) sieve while the other portion contains only particles passing the No. 10 sieve. The mass of air-dried soil selected for purpose of tests, as prescribed in Practice D 421, shall be sufficient to yield quantities for mechanical analysis as follows:

5.1.1 The size of the portion retained on the No. 10 sieve shall depend on the maximum size of particle, according to the following schedule:

Nominal Diameter of Largest Particles, in. (mm)	Approximate Minimum Mass of Portion, g
⅜ (9.5)	500
¾ (19.0)	1000
1 (25.4)	2000
1½ (38.1)	3000
2 (50.8)	4000
3 (76.2)	5000

5.1.2 The size of the portion passing the No. 10 sieve shall be approximately 115 g for sandy soils and approximately 65 g for silt and clay soils.

5.2 Provision is made in Section 5 of Practice D 421 for weighing of the air-dry soil selected for purpose of tests, the separation of the soil on the No. 10 sieve by dry-sieving and washing, and the weighing of the washed and dried fraction retained on the No. 10 sieve. From these two masses the percentages retained and passing the No. 10 sieve can be calculated in accordance with 12.1.

NOTE 8—A check on the mass values and the thoroughness of pulverization of the clods may be secured by weighing the portion passing the No. 10 sieve and adding this value to the mass of the washed and oven-dried portion retained on the No. 10 sieve.

SIEVE ANALYSIS OF PORTION RETAINED ON NO. 10 (2.00-mm) SIEVE

6. Procedure

6.1 Separate the portion retained on the No. 10 (2.00-mm) sieve into a series of fractions using the 3-in. (75-mm), 2-in. (50-mm), 1½-in. (37.5-mm), 1-in. (25.0-mm), ¾-in. (19.0-mm), ⅜-in. (9.5-mm), No. 4 (4.75-mm), and No. 10 sieves, or as many as may be needed depending on the sample, or upon the specifications for the material under test.

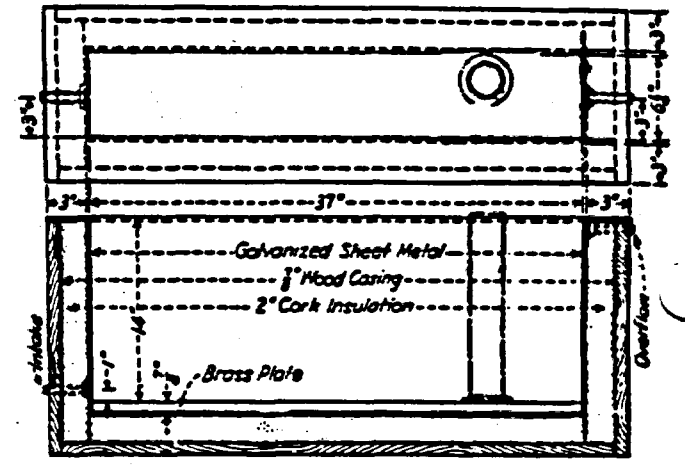

Metric Equivalents

in.	⅞	1	3	6¼	14	37
mm	22.2	25.4	76.2	158.2	356	940

FIG. 4 Insulated Water Bath

6.2 Conduct the sieving operation by means of a lateral and vertical motion of the sieve, accompanied by a jarring action in order to keep the sample moving continuously over the surface of the sieve. In no case turn or manipulate fragments in the sample through the sieve by hand. Continue sieving until not more than 1 mass % of the residue on a sieve passes that sieve during 1 min of sieving. When mechanical sieving is used, test the thoroughness of sieving by using the hand method of sieving as described above.

6.3 Determine the mass of each fraction on a balance conforming to the requirements of 3.1. At the end of weighing, the sum of the masses retained on all the sieves used should equal closely the original mass of the quantity sieved.

AR 301422

HYDROMETER AND SIEVE ANALYSIS OF PORTION PASSING THE NO. 10 (2.00-mm) SIEVE

Determination of Composite Correction for Hydrometer Reading

7.1 Equations for percentages of soil remaining in suspension, as given in 14.3, are based on the use of distilled or demineralized water. A dispersing agent is used in the water, however, and the specific gravity of the resulting liquid is appreciably greater than that of distilled or demineralized water.

7.1.1 Both soil hydrometers are calibrated at 68°F (20°C), and variations in temperature from this standard temperature produce inaccuracies in the actual hydrometer readings. The amount of the inaccuracy increases as the variation from the standard temperature increases.

7.1.2 Hydrometers are graduated by the manufacturer to be read at the bottom of the meniscus formed by the liquid on the stem. Since it is not possible to secure readings of soil suspensions at the bottom of the meniscus, readings must be taken at the top and a correction applied.

7.1.3 The net amount of the corrections for the three items enumerated is designated as the composite correction, and may be determined experimentally.

7.2 For convenience, a graph or table of composite corrections for a series of 1° temperature differences for the range of expected test temperatures may be prepared and used as needed. Measurement of the composite corrections may be made at two temperatures spanning the range of expected test temperatures, and corrections for the intermediate temperatures calculated assuming a straight-line relationship between the two observed values.

7.3 Prepare 1000 mL of liquid composed of distilled or demineralized water and dispersing agent in the same proportion as will prevail in the sedimentation (hydrometer) test. Place the liquid in a sedimentation cyclinder and the cylinder in the constant-temperature water bath, set for one of the two temperatures to be used. When the temperature of the liquid becomes constant, insert the hydrometer, and, after a short interval to permit the hydrometer to come to the temperature of the liquid, read the hydrometer at the top of the meniscus formed on the stem. For hydrometer 151H the composite correction is the difference between this reading and one; for hydrometer 152H it is the difference between the reading and zero. Bring the liquid and the hydrometer to the other temperature to be used, and secure the composite correction as before.

8. Hygroscopic Moisture

8.1 When the sample is weighed for the hydrometer test, weigh out an auxiliary portion of from 10 to 15 g in a small metal or glass container, dry the sample to a constant mass in an oven at 230 ± 9°F (110 ± 5°C), and weigh again. Record the masses.

9. Dispersion of Soil Sample

9.1 When the soil is mostly of the clay and silt sizes, weigh out a sample of air-dry soil of approximately 50 g. When the soil is mostly sand the sample should be approximately 100 g.

9.2 Place the sample in the 250-mL beaker and cover with 125 mL of sodium hexametaphosphate solution (40 g/L). Stir until the soil is thoroughly wetted. Allow to soak for at least 16 h.

9.3 At the end of the soaking period, disperse the sample further, using either stirring apparatus A or B. If stirring apparatus A is used, transfer the soil - water slurry from the beaker into the special dispersion cup shown in Fig. 2, washing any residue from the beaker into the cup with distilled or demineralized water (Note 9). Add distilled or demineralized water, if necessary, so that the cup is more than half full. Stir for a period of 1 min.

NOTE 9—A large size syringe is a convenient device for handling the water in the washing operation. Other devices include the wash-water bottle and a hose with nozzle connected to a pressurized distilled water tank.

9.4 If stirring apparatus B (Fig. 3) is used, remove the cover cap and connect the cup to a compressed air supply by means of a rubber hose. A air gage must be on the line between the cup and the control valve. Open the control valve so that the gage indicates 1 psi (7 kPa) pressure (Note 10). Transfer the soil - water slurry from the beaker to the air-jet dispersion cup by washing with distilled or demineralized water. Add distilled or demineralized water, if necessary, so that the total volume in the cup is 250 mL, but no more.

NOTE 10—The initial air pressure of 1 psi is required to prevent the soil - water mixture from entering the air-jet chamber when the mixture is transferred to the dispersion cup.

9.5 Place the cover cap on the cup and open the air control valve until the gage pressure is 20 psi (140 kPa). Disperse the soil according to the following schedule:

Plasticity Index	Dispersion Period, min
Under 5	5
6 to 20	10
Over 20	15

Soils containing large percentages of mica need be dispersed for only 1 min. After the dispersion period, reduce the gage pressure to 1 psi preparatory to transfer of soil - water slurry to the sedimentation cylinder.

10. Hydrometer Test

10.1 Immediately after dispersion, transfer the soil - water slurry to the glass sedimentation cylinder, and add distilled or demineralized water until the total volume is 1000 mL.

10.2 Using the palm of the hand over the open end of the cylinder (or a rubber stopper in the open end), turn the cylinder upside down and back for a period of 1 min to complete the agitation of the slurry (Note 11). At the end of 1 min set the cylinder in a convenient location and take hydrometer readings at the following intervals of time (measured from the beginning of sedimentation), or as many as may be needed, depending on the sample or the specification for the material under test: 2, 5, 15, 30, 60, 250, and 1440 min. If the controlled water bath is used, the sedimentation cylinder should be placed in the bath between the 2- and 5-min readings.

NOTE 11—The number of turns during this minute should be approximately 60, counting the turn upside down and back as two turns

AR 301423

Any soil remaining in the bottom of the cylinder during the first few turns should be loosened by vigorous shaking of the cylinder while it is in the inverted position.

10.3 When it is desired to take a hydrometer reading, carefully insert the hydrometer about 20 to 25 s before the reading is due to approximately the depth it will have when the reading is taken. As soon as the reading is taken, carefully remove the hydrometer and place it with a spinning motion in a graduate of clean distilled or demineralized water.

NOTE 12—It is important to remove the hydrometer immediately after each reading. Readings shall be taken at the top of the meniscus formed by the suspension around the stem, since it is not possible to secure readings at the bottom of the meniscus.

10.4 After each reading, take the temperature of the suspension by inserting the thermometer into the suspension.

11. Sieve Analysis

11.1 After taking the final hydrometer reading, transfer the suspension to a No. 200 (75-μm) sieve and wash with tap water until the wash water is clear. Transfer the material on the No. 200 sieve to a suitable container, dry in an oven at 230 ± 9°F (110 ± 5°C) and make a sieve analysis of the portion retained, using as many sieves as desired, or required for the material, or upon the specification of the material under test.

CALCULATIONS AND REPORT

12. Sieve Analysis Values for the Portion Coarser than the No. 10 (2.00-mm) Sieve

12.1 Calculate the percentage passing the No. 10 sieve by dividing the mass passing the No. 10 sieve by the mass of soil originally split on the No. 10 sieve, and multiplying the result by 100. To obtain the mass passing the No. 10 sieve, subtract the mass retained on the No. 10 sieve from the original mass.

12.2 To secure the total mass of soil passing the No. 4 (4.75-mm) sieve, add to the mass of the material passing the No. 10 sieve the mass of the fraction passing the No. 4 sieve and retained on the No. 10 sieve. To secure the total mass of soil passing the ⅜-in. (9.5-mm) sieve, add to the total mass of soil passing the No. 4 sieve, the mass of the fraction passing the ⅜-in. sieve and retained on the No. 4 sieve. For the remaining sieves, continue the calculations in the same manner.

12.3 To determine the total percentage passing for each sieve, divide the total mass passing (see 12.2) by the total mass of sample and multiply the result by 100.

13. Hygroscopic Moisture Correction Factor

13.1 The hydroscopic moisture correction factor is the ratio between the mass of the oven-dried sample and the air-dry mass before drying. It is a number less than one, except when there is no hygroscopic moisture.

14. Percentages of Soil in Suspension

14.1 Calculate the oven-dry mass of soil used in the hydrometer analysis by multiplying the air-dry mass by the hygroscopic moisture correction factor.

TABLE 1 Values of Correction Factor, *a*, for Different Specific Gravities of Soil Particles[A]

Specific Gravity	Correction Factor[A]
2.95	0.94
2.90	0.95
2.85	0.96
2.80	0.97
2.75	0.98
2.70	0.99
2.65	1.00
2.60	1.01
2.55	1.02
2.50	1.03
2.45	1.05

[A] For use in equation for percentage of soil remaining in suspension when using Hydrometer 152H.

14.2 Calculate the mass of a total sample represented by the mass of soil used in the hydrometer test, by dividing the oven-dry mass used by the percentage passing the No. 10 (2.00-mm) sieve, and multiplying the result by 100. This value is the weight W in the equation for percentage remaining in suspension.

14.3 The percentage of soil remaining in suspension at the level at which the hydrometer is measuring the density of the suspension may be calculated as follows (Note 13): For hydrometer 151H:

$$P = [(100\,000/W) \times G/(G - G_1)](R - G_1)$$

NOTE 13—The bracketed portion of the equation for hydrometer 151H is constant for a series of readings and may be calculated first and then multiplied by the portion in the parentheses.

For hydrometer 152H:

$$P = (Ra/W) \times 100$$

where:

a = correction faction to be applied to the reading of hydrometer 152H. (Values shown on the scale are computed using a specific gravity of 2.65. Correction factors are given in Table 1),

P = percentage of soil remaining in suspension at the level at which the hydrometer measures the density of the suspension,

R = hydrometer reading with composite correction applied (Section 7),

W = oven-dry mass of soil in a total test sample represented by mass of soil dispersed (see 14.2), g,

G = specific gravity of the soil particles, and

G_1 = specific gravity of the liquid in which soil particles are suspended. Use numerical value of one in both instances in the equation. In the first instance any possible variation produces no significant effect, and in the second instance, the composite correction for R is based on a value of one for G_1.

15. Diameter of Soil Particles

15.1 The diameter of a particle corresponding to the percentage indicated by a given hydrometer reading shall be calculated according to Stokes' law (Note 14), on the basis that a particle of this diameter was at the surface of the suspension at the beginning of sedimentation and had settled to the level at which the hydrometer is measuring the density of the suspension. According to Stokes' law:

$$D = \sqrt{[30\eta/980(G - G_1)] \times L/T}$$

AR 301424

where:

D = diameter of particle, mm,

= coefficient of viscosity of the suspending medium (in this case water) in poises (varies with changes in temperature of the suspending medium),

L = distance from the surface of the suspension to the level at which the density of the suspension is being measured, cm. (For a given hydrometer and sedimentation cylinder, values vary according to the hydrometer readings. This distance is known as effective depth (Table 2)),

T = interval of time from beginning of sedimentation to the taking of the reading, min,

G = specific gravity of soil particles, and

G_l = specific gravity (relative density) of suspending medium (value may be used as 1.000 for all practical purposes).

NOTE 14—Since Stokes' law considers the terminal velocity of a single sphere falling in an infinity of liquid, the sizes calculated represent the diameter of spheres that would fall at the same rate as the soil particles.

15.2 For convenience in calculations the above equation may be written as follows:

$$D = K\sqrt{L/T}$$

where:

K = constant depending on the temperature of the suspension and the specific gravity of the soil particles. Values of K for a range of temperatures and specific gravities are given in Table 3. The value of K does not change for a series of readings constituting a test, while values of L and T do vary.

15.3 Values of D may be computed with sufficient accuracy, using an ordinary 10-in. slide rule.

NOTE 15—The value of L is divided by T using the A- and B-scales, the square root being indicated on the D-scale. Without ascertaining the value of the square root it may be multiplied by K, using either the C- or CI-scale.

16. Sieve Analysis Values for Portion Finer than No. 10 (2.00-mm) Sieve

16.1 Calculation of percentages passing the various sieves used in sieving the portion of the sample from the hydrometer test involves several steps. The first step is to calculate the mass of the fraction that would have been retained on the No. 10 sieve had it not been removed. This mass is equal to the total percentage retained on the No. 10 sieve (100 minus total percentage passing) times the mass of the total sample represented by the mass of soil used (as calculated in 14.2), and the result divided by 100.

16.2 Calculate next the total mass passing the No. 200 sieve. Add together the fractional masses retained on all the sieves, including the No. 10 sieve, and subtract this sum from the mass of the total sample (as calculated in 14.2).

16.3 Calculate next the total masses passing each of the [illegible]r sieves, in a manner similar to that given in 12.2.

16.4 Calculate last the total percentages passing by dividing the total mass passing (as calculated in 16.3) by the total mass of sample (as calculated in 14.2), and multiply the result by 100.

TABLE 2 Values of Effective Depth Based on Hydrometer and Sedimentation Cylinder of Specified Sizes[A]

Hydrometer 151H		Hydrometer 152H			
Actual Hydrometer Reading	Effective Depth, L, cm	Actual Hydrometer Reading	Effective Depth, L, cm	Actual Hydrometer Reading	Effective Depth, L, cm
1.000	16.3	0	16.3	31	11.2
1.001	16.0	1	16.1	32	11.1
1.002	15.8	2	16.0	33	10.9
1.003	15.5	3	15.8	34	10.7
1.004	15.2	4	15.6	35	10.6
1.005	15.0	5	15.5		
1.006	14.7	6	15.3	36	10.4
1.007	14.4	7	15.2	37	10.2
1.008	14.2	8	15.0	38	10.1
1.009	13.9	9	14.8	39	9.9
1.010	13.7	10	14.7	40	9.7
1.011	13.4	11	14.5	41	9.6
1.012	13.1	12	14.3	42	9.4
1.013	12.9	13	14.2	43	9.2
1.014	12.6	14	14.0	44	9.1
1.015	12.3	15	13.8	45	8.9
1.016	12.1	16	13.7	46	8.8
1.017	11.8	17	13.5	47	8.6
1.018	11.5	18	13.3	48	8.4
1.019	11.3	19	13.2	49	8.3
1.020	11.0	20	13.0	50	8.1
1.021	10.7	21	12.8	51	7.9
1.022	10.5	22	12.7	52	7.8
1.023	10.2	23	12.5	53	7.6
1.024	10.0	24	12.4	54	7.4
1.025	9.7	25	12.2	55	7.3
1.026	9.4	26	12.0	56	7.1
1.027	9.2	27	11.9	57	7.0
1.028	8.9	28	11.7	58	6.8
1.029	8.6	29	11.5	59	6.6
1.030	8.4	30	11.4	60	6.5
1.031	8.1				
1.032	7.8				
1.033	7.6				
1.034	7.3				
1.035	7.0				
1.036	6.8				
1.037	6.5				
1.038	6.2				

[A] Values of effective depth are calculated from the equation:

$$L = L_1 + \tfrac{1}{2}[L_2 - (V_B/A)]$$

where:

L = effective depth, cm,

L_1 = distance along the stem of the hydrometer from the top of the bulb to the mark for a hydrometer reading, cm,

L_2 = overall length of the hydrometer bulb, cm,

V_B = volume of hydrometer bulb, cm³, and

A = cross-sectional area of sedimentation cylinder, cm²

Values used in calculating the values in Table 2 are as follows:

For both hydrometers, 151H and 152H:

L_2 = 14.0 cm

V_B = 67.0 cm³

A = 27.8 cm²

For hydrometer 151H:

L_1 = 10.5 cm for a reading of 1.000

= 2.3 cm for a reading of 1.031

For hydrometer 152H:

L_1 = 10.5 cm for a reading of 0 g/litre

= 2.3 cm for a reading of 50 g/litre

AR301425

17. Graph

17.1 When the hydrometer analysis is performed, a graph

TABLE 3 Values of K for Use in Equation for Computing Diameter of Particle in Hydrometer Analysis

Temperature, °C	Specific Gravity of Soil Particles								
	2.45	2.50	2.55	2.60	2.65	2.70	2.75	2.80	2.85
16	0.01510	0.01505	0.01481	0.01457	0.01435	0.01414	0.01394	0.01374	0.01356
17	0.01511	0.01486	0.01462	0.01439	0.01417	0.01396	0.01376	0.01358	0.01338
18	0.01492	0.01467	0.01443	0.01421	0.01399	0.01378	0.01359	0.01339	0.01321
19	0.01474	0.01449	0.01425	0.01403	0.01382	0.01361	0.01342	0.1323	0.01305
20	0.01456	0.01431	0.01408	0.01386	0.01365	0.01344	0.01325	0.01307	0.01289
21	0.01438	0.01414	0.01391	0.01369	0.01348	0.01328	0.01309	0.01291	0.01273
22	0.01421	0.01397	0.01374	0.01353	0.01332	0.01312	0.01294	0.01276	0.01258
23	0.01404	0.01381	0.01358	0.01337	0.01317	0.01297	0.01279	0.01261	0.01243
24	0.01388	0.01365	0.01342	0.01321	0.01301	0.01282	0.01264	0.01246	0.01229
25	0.01372	0.01349	0.01327	0.01306	0.01286	0.01267	0.01249	0.01232	0.01215
26	0.01357	0.01334	0.01312	0.01291	0.01272	0.01253	0.01235	0.01218	0.01201
27	0.01342	0.01319	0.01297	0.01277	0.01258	0.01239	0.01221	0.01204	0.01188
28	0.01327	0.01304	0.01283	0.01264	0.01244	0.01255	0.01208	0.01191	0.01175
29	0.01312	0.01290	0.01269	0.01249	0.01230	0.01212	0.01195	0.01178	0.01162
30	0.01298	0.01278	0.01256	0.01236	0.01217	0.01199	0.01182	0.01165	0.01149

of the test results shall be made, plotting the diameters of the particles on a logarithmic scale as the abscissa and the percentages smaller than the corresponding diameters to an arithmetic scale as the ordinate. When the hydrometer analysis is not made on a portion of the soil, the preparation of the graph is optional, since values may be secured directly from tabulated data.

18. Report

18.1 The report shall include the following:

18.1.1 Maximum size of particles,

18.1.2 Percentage passing (or retained on) each sieve, which may be tabulated or presented by plotting on a graph (Note 16),

18.1.3 Description of sand and gravel particles:

18.1.3.1 Shape—rounded or angular,

18.1.3.2 Hardness—hard and durable, soft, or weathered and friable,

18.1.4 Specific gravity, if unusually high or low,

18.1.5 Any difficulty in dispersing the fraction passing the No. 10 (2.00-mm) sieve, indicating any change in type and amount of dispersing agent, and

18.1.6 The dispersion device used and the length of the dispersion period.

NOTE 16—This tabulation of graph represents the gradation of the sample tested. If particles larger than those contained in the sample were removed before testing, the report shall so state giving the amount and maximum size.

18.2 For materials tested for compliance with definite specifications, the fractions called for in such specifications shall be reported. The fractions smaller than the No. 10 sieve shall be read from the graph.

18.3 For materials for which compliance with definite specifications is not indicated and when the soil is composed almost entirely of particles passing the No. 4 (4.75-mm) sieve, the results read from the graph may be reported as follows:

(1) Gravel, passing 3-in. and retained on No. 4 sieve ..... %
(2) Sand, passing No. 4 sieve and retained on No. 200 sieve ..... %
  (a) Coarse sand, passing No. 4 sieve and retained on No. 10 sieve ..... %
  (b) Medium sand, passing No. 10 sieve and retained on No. 40 sieve ..... %
  (c) Fine sand, passing No. 40 sieve and retained on No. 200 sieve ..... %
(3) Silt size, 0.074 to 0.005 mm ..... %
(4) Clay size, smaller than 0.005 mm .....
  Colloids, smaller than 0.001 mm .....

18.4 For materials for which compliance with definite specifications is not indicated and when the soil contains material retained on the No. 4 sieve sufficient to require a sieve analysis on that portion, the results may be reported as follows (Note 17):

SIEVE ANALYSIS

Sieve Size	Percentage Passing
3-in.	.....
2-in.	.....
1½-in.	.....
1-in.	.....
¾-in.	.....
⅜-in.	.....
No. 4 (4.75-mm)	.....
No. 10 (2.00-mm)	.....
No. 40 (425-μm)	.....
No. 200 (75-μm)	.....
HYDROMETER ANALYSIS	
0.074 mm	.....
0.005 mm	.....
0.001 mm	.....

NOTE 17—No. 8 (2.36-mm) and No. 50 (300-μm) sieves may be substituted for No. 10 and No. 40 sieves.

The American Society for Testing and Materials takes no position respecting the validity of any patent rights asserted in connection with any item mentioned in this standard. Users of this standard are expressly advised that determination of the validity of any such patent rights, and the risk of infringement of such rights, are entirely their own responsibility.

RR301426

This standard is subject to revision at any time by the responsible technical committee and must be reviewed every five years and if not revised, either reapproved or withdrawn. Your comments are invited either for revision of this standard or for additional standards and should be addressed to ASTM Headquarters. Your comments will receive careful consideration at a meeting of the responsible technical committee, which you may attend. If you feel that your comments have not received a fair hearing you should make your views known to the ASTM Committee on Standards, 1916 Race St., Philadelphia, PA 19103.

CARBON, TOTAL ORGANIC AND INORGANIC

Carbon may exist in sediment and water samples as either inorganic or organic compounds. Inorganic carbon is present as carbonates, bicarbonates, and possibly free carbon dioxide. Specific types of compounds that are considered to be included in the organic carbon fraction are nonvolatile organic compounds (sugars), volatile organic compounds (mercaptans), partially volatile compounds (oils), and particulate carbonaceous materials (cellulose).[1,2*]

The basis of the method is the catalytic or chemical oxidation of carbon in carbon-containing compounds to carbon dioxide followed by the quantification of the carbon dioxide produced. Alternately, the carbon may be reduced to methane and appropriately quantified. It follows, then, that the distinction between inorganic carbon and organic carbon is the method of sample pretreatment. There are presently two procedures for defining this separation. One method is based on sample treatment with a strong acid. Analysis of an untreated sample is a measure of total carbon while analysis of the acid-treated fraction is a measure of organic carbon. Inorganic carbon is calculated by subtraction. The second method of separation is based on differential thermal combustion with organic compounds being converted to carbon dioxide at 500°C to 650°C[3,4] and inorganic carbon being converted to carbon dioxide at 950°C to 1300°C.[4,5]

Sample Handling and Storage

Flowcharts for the handling of samples intended for organic carbon and inorganic carbon analysis are presented in Figure 3-6 and Figure 3-7. Water and sediment samples to be analyzed for inorganic carbon may be stored in glass or plastic containers. There is no effective preservative because of the carbon dioxide reserve in the atmosphere. The only precaution that can be taken for inorganic

---

* References for this procedure can be found on page 3-76. AR301427

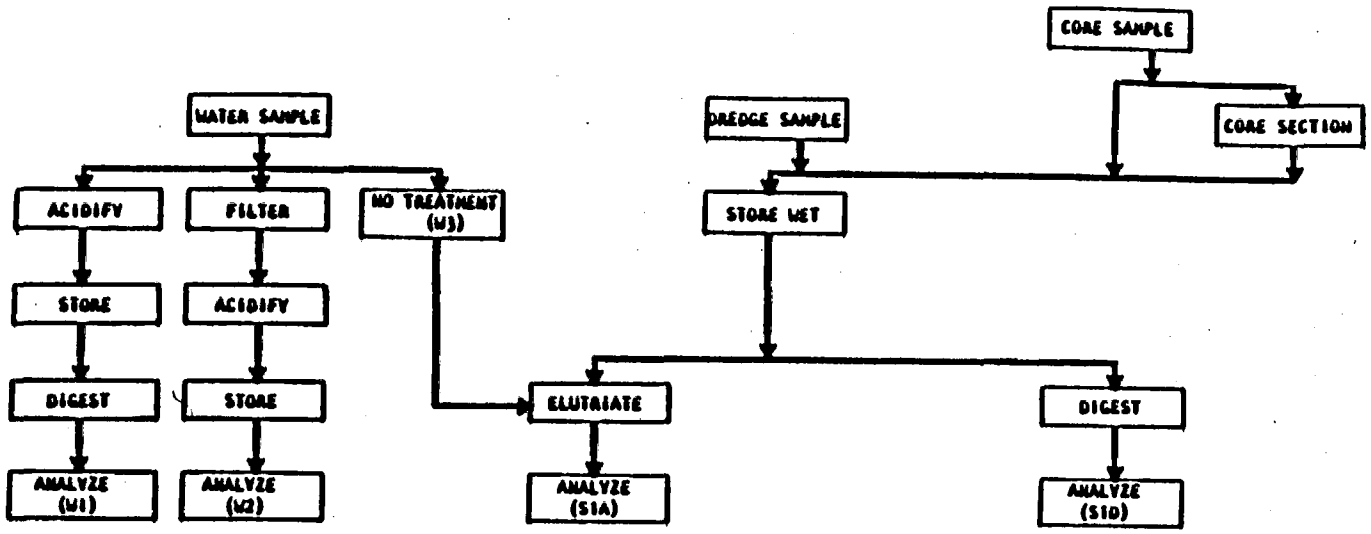

SAMPLE DESIGNATION	W1	W2	W3	S1A	S1B	S1C	S1D	S2	S3
PURPOSE	Total Water Conc.	Soluble Water Conc.	Used in Elutriate	Mobile Conc.			Total Sediment Conc.		
CONTAINER	G,P	G,P	G,P	G,P			G,P		
SAMPLE TREATMENT	None	Filter	None	None			None		
PRESERVATIVE	4°C (Minimize Air Contact.)	4°C	4°C	4°C (Minimize Air Contact. Keep Field Moist.)			4°C		
STORAGE TIME	24 hr	24 hr	-	24 hr					
DIGESTION SOLUTION									
SAMPLE VOLUME OR WEIGHT	100 ml	100 ml	-	100 ml			1 g		

Figure 3-6. Handling and storage of samples for total inorganic carbon analysis

AR301428

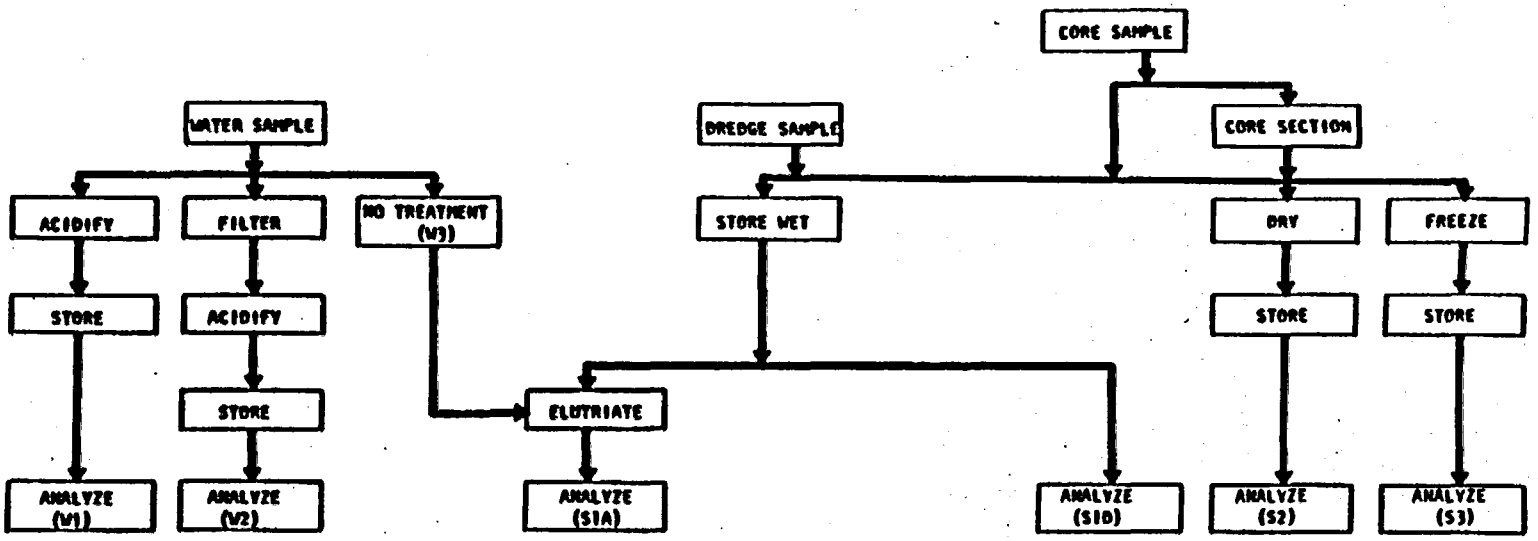

SAMPLE DESIGNATION	W1	W2	W3	S1A	S1D	S2	S3
PURPOSE	Total Water Conc.	Soluble Water Conc.	Used in Elutriate	Mobile Conc.	Total Sediment Conc.	Total Sediment Conc.	Total Sediment Conc.
CONTAINER	G	G	G	G,P	G,P	G,P	G,P
SAMPLE TREATMENT	None	Filter	None	None	None	Air dry	Freeze
PRESERVATIVE	HCl or H_2SO_4 to pH2 4°C	HCl or H_2SO_4 to pH2 4°C	4°C	4°C	4°C	None	None
STORAGE TIME	24 hr	24 hr	<1w	<1w	-	-	-
SAMPLE VOLUME OR WEIGHT	30-100 ml	30-100 ml	Variable		0.5-5.0 g	0.5-5.0 g	0.5-5.0 g

Figure 3-7. Handling and storage of samples for total organic carbon analysis

AR301429

carbon is to completely fill the sample container at the time of sampling (exclude all air bubbles), tightly seal the container, and complete the analysis immediately (Figure 3-6).

Water samples for organic carbon analysis should be stored in glass containers unless substitute containers have been shown not to affect total organic carbon (TOC) analyses. Samples should be processed as soon as possible (within 24 hr if possible) to minimize change due to chemical or biological oxidation. Atmospheric uptake of carbon dioxide is less critical since it would be evolved when the sample is acidified prior to analysis. Sediment samples for organic carbon analysis may be stored in either plastic or glass containers (Figure 3-7). Air drying of sediments (S2) may lead to low TOC results due to oxidation or volatilization. Therefore, moist storage (S1D) or frozen storage (S3) would be the preferred method of storage. If samples are frozen, excessive temperatures should not be used to thaw the samples.

AR301430

Procedure for Water Samples (W1, W2, S1A)

Method 1: Infrared Analysis[6,7]

Apparatus

Sample homogenizer such as a Waring blender or ultrasonic blender

Magnetic stirrer

Hypodermic syringe

Total carbon analyzer, either a single channel or a dual channel instrument (Dow-Beckman Carbonaceous Analyzer Model No. 915, Dohrmann Envirotech DC-50 carbon analyzer, Oceanography International Total Carbon Analyzer, Leco, or equivalent)

Reagents

Distilled water: the distilled water used in the preparation of standards and dilution of samples should be of the highest quality in order to have a small blank.

Organic carbon, stock solution, 1000 mg/ℓ C: dissolve 2.125 g anhydrous potassium biphthalate, $KHC_8H_4O_4$, in distilled water and dilute to 1 ℓ in a volumetric flask.

Organic carbon, standard solutions: prepare standard solution by dilution of the stock solution as required.

Inorganic carbon, stock solution, 1000 mg/ℓ: dissolve 3.500 g sodium bicarbonate, $NaHCO_3$, and 4.418 g sodium carbonate, Na_2CO_3, in distilled water in a 1-ℓ volumetric flask and make up to the mark.

Inorganic carbon, standard solution: prepare standards from the stock solution as required.

Packing for total carbon tube: dissolve 20 g cobalt nitrate, $CO(NO_3)_2 \cdot 6H_2O$, in 50 ml distilled water. Add this solution to 15 g long-fiber asbestos in a porcelain evaporating dish. Mix and evaporate to dryness on a steam bath. Place the dish in a muffle furnace and bring to 950°C. After 1 to 2 hr at this temperature, remove the dish and allow to cool. Break up any large lumps and mix adequately but not excessively. With the combustion tube held in a vertical position, taper joint up, put about 1/2 in. of untreated asbestos in the tube first, then transfer in small amounts, approximately 1 g of catalyst into the tube with forceps or tweezers. As it is added, tap or push the material gently with a 1/4-in. glass rod. Do not force the packing. The weight of the rod itself is sufficient to compress the material. When completed, the length of the packing should be about 5 or 6 cm. Test the packed tube by measuring the flow rat

AR301431

gas through it at room temperature, and then at 750°C. The rate should not drop more than 20 percent.

Packing for carbonate tube (dual channel instrument): place a small wad of quartz wool or asbestos near the exit end of the carbonate evolution tube. From the entrance end add 6 to 12 mesh quartz chips, allowing these to collect against the wad to a length of 10 cm. Pour an excess of 85 percent phosphoric acid, H_3PO_4, into the tube while holding it vertically and allow the excess to drain out.

Nitrogen gas, carbon dioxide free.

Procedure

Turn on the infrared analyzer, recorder, and tube furnaces, setting the total carbon furnace at 950°C and the carbonate furnace at 175°C. Allow sufficient warm-up time for stable, drift-free operation; about 2 hr is required. If used daily, the analyzer can be left on continuously. Adjust the oxygen flow rate to 80 to 100 ml/min through the total carbon tube. With other instruments, follow manufacturer's directions to warm up the instrument.

Immediately prior to carrying out calibrations or analyses, inject several portions of the appropriate standard into the tube to be used, until constant readings are obtained. The actual injection technique is as follows: rinse the syringe several times with the solution to be analyzed, fill, and adjust the volume to be pipeted. Wipe off the excess with soft paper tissue, taking care that no lint adheres to the needle. Remove the plug from the syringe holder, insert the sample syringe, and inject the sample into the combustion tube with a single, rapid movement of the thumb. Leave the syringe in the holder until the flow rate returns to normal, then replace it with the plug.

Successively introduce a convenient sized aliquot (20 to 50 µl) of each organic carbon standard and a blank into the total carbon tube and record peak heights. Between injections allow the recorder pen to return to its baseline. When a dual channel instrument is used, the standardization procedure must be repeated using carbonate standards to calibrate the low temperature channel.

Thoroughly mix the sample. Inject a convenient sized aliquot (20 to 50 µl) of the sample into the total carbon tube and

AR301432

record the peak height. This result is a measure of the organic carbon concentration and the inorganic carbon concentration of the sample.

Thoroughly mix the sample using a Waring blender or an ultrasonic homogenizer. Transfer 10 to 15 ml of sample to a 30-ml beaker and acidify with concentrated HCl to a pH of 2 or less. Purge the sample with carbon dioxide free nitrogen gas for 5 to 10 min. Plastic tubing should not be used during the purging process unless it has been previously shown that it will not add organic carbon to the sample.

Mix the acidified sample on a magnetic stirrer. While stirring, withdraw a subsample from the beaker using a hypodermic needle with a 150-μm opening. Inject the sample into the carbon analyzer to be used and record the peak height. This result is a measure of the organic carbon concentration of the sample.

Using either clear or filtered water samples, analytical precision will approach 1 to 2 percent or 1 to 2 mg/l carbon, whichever is greater. Analytical precision for unfiltered water samples will increase to 5 to 10 percent because of the difficulty associated with sampling particulate matter and the fact that the needle opening of the syringe limits the maximum size of the particles that can be included in the sample.

Calculations

Dual-channel instrument. Prepare calibration curves derived from the peak heights obtained with the standard total carbon and inorganic carbon solutions.

Determine the concentration of total carbon and inorganic carbon in the sample by comparing sample peak heights with the calibration curves.

Determine the concentration of total inorganic carbon in the sample by subtracting the organic carbon value from the total carbon value.

Single-channel instrument. Prepare a calibration curve derived from the peak heights obtained with the standard total carbon solutions. Determine the total carbon concentration in the sample by comparing the peak height of the first sample injection with

AR301433

calibration curve. Determine the organic carbon concentration in the sample by comparing the peak height of the second sample injection with the calibration curve. Inorganic carbon concentrations are calculated by subtracting the organic carbon concentration from the total carbon concentration.

AR301434

Procedures for Sediment Samples (S1D, S3)

Method 1: Sample Ignition

Apparatus

Induction furnace such as the Leco WR-12, Dohrmann DC-50, Coleman CH analyzer, or Perkin Elmer 240 elemental analyzer

Combustion boats

Microbalance

Desiccator

Reagents

10 percent hydrochloric acid: mix 100 ml concentrated HCl with 900 ml distilled water.

Copper oxide fines.

Benzoic acid.

Procedure

Dry at 70°C and grind the sediment sample.

Weigh a combustion boat and record the weight. Place 0.2 to 0.5 g homogenized sediment in the combustion boat and reweigh. Combustion boats should not be handled with the bare hand during this process.

If total carbon or inorganic carbon is to be determined, Cupric oxide fines may be added to the sample to assist in combustion. Combust the sample in an induction furnace. Record the result as total carbon.

If organic carbon is to be determined, treat a known weight of dried sediment with several drops of 10 percent HCl. Wait until the effervescing is completed and add more acid. Continue this process until the incremental addition of acid causes no further effervescence. Do not add too much acid at one time as this may cause loss of sample due to frothing.

Dry the sample at 70°C and place in a desiccator. Add Cupric oxide fines, combust the sample in an induction furnace, and record the result as organic carbon.

AR301435

Calculations

The carbon content of the sample can be calculated as:

$$\%C = \frac{\text{weight of tube (after-before)}}{\text{sample weight}} \times 27.29$$

Derivation of factor:

$$27.29 = \frac{12.011 \text{ (molecular weight carbon)}}{44.011 \text{ (molecular weight carbon dioxide)}} \times 100\%$$

When the total sample results are used, the result is percent carbon in the sample. When acid-treated samples are used, the result is percent organic carbon. Inorganic carbon is calculated as total carbon minus organic carbon.

Method 2: Differential Combustion[4,5]

Apparatus

Sargent programmed microcombustion apparatus or equivalent

Microbalance

Procedure

Air dry the sediment sample. Using a mortar and pestle, grind the sample to pass a 100-mesh screen.

Combust a known weight of sediment at a programmed heating rate of 300° to 950°C in 10 min and then maintain 950°C for 20 min. Trap the CO_2 in ascarite and record the weight as total carbon. A sample size should be selected that will produce 25 to 50 mg CO_2.

Weigh a second portion of the dried sediment. Combust this sample at a programmed rate of 300° to 650°C in 10 min and maintain 650°C for 20 min. Trap the CO_2 in ascarite and record the weight as organic carbon.

Calculations

The total carbon concentration, C_t, of the sample (in mg/g) is calculated as follows:

$$C_t = \frac{(x_t)\left(\frac{12}{44}\right)}{(g)}$$

where

x_t = weight of CO_2 evolved at 950°C, mg

AR301436

g = weight of sample combusted, g

The organic carbon, C_o, concentration of the sample (in mg/g) is calculated as follows:

$$C_o = \frac{(x_o)\ (\frac{12}{44})}{(g)}$$

where

x_o = weight of CO_2 evolved at 650°C, mg

g = weight of sample combusted, g

Inorganic carbon, C_I, (in mg/g) is calculated as:

$$C_I = C_t - C_o$$

Method 3: Wet Combustion[4,8]

A third method has been used for carbon in sediments. This is based on the oxidation of the sample with dichromate and back titration of the sample with ferrous ammonium sulfate. References are provided for the procedure but details are not given. The procedure is similar to the chemical oxygen demand test which is not specific for carbon. The wet combustion method is a redox procedure and any reduced chemicals in the sediment samples (ferrous iron, manganous manganese, sulfide) will react with the dichromate. Therefore, this procedure is not recommended unless other instrumentation is not available.

AR301437

References

1. U. S. Environmental Protection Agency. "Manual of Methods for Chemical Analysis of Water and Wastes." Methods Development and Quality Assurance Research Laboratory, National Environmental Research Center; Cincinnati, Ohio. 298 p. (1974).

2. U. S. Environmental Protection Agency. "Methods for Chemical Analysis of Water and Wastes." Environmental Monitoring and Support Laboratory, Office of Research and Development, EPA; Cincinnati, Ohio (1979).

3. Giovannini, G., Poggio, G., and Sequi, P. "Use of an Automatic CHN Analyzer to Determine Organic and Inorganic Carbon in Soils." Unpublished Report, Laboratory of Soil Chemistry, via Corridoni, Pisa, Italy. 9 p. (1975).

4. Konrad, J. G., Chesters, G., and Keeney, D. R. "Determination of Organic- and Carbonate-Carbon in Freshwater Lake Sediments by a Microcombustion Procedure." J. Thermal Analysis 2:199-208 (1970).

5. Kemp, A. L. W. "Organic Matter in the Sediments of Lakes Ontario and Erie." Proc. 12th Conference Great Lakes Research 12:237-249 (1969).

6. Environment Canada. "Analytical Methods Manual," Inland Waters Directorate, Water Quality Branch; Ottawa, Canada (1974).

7. American Public Health Association. Standard Methods for the Examination of Water and Wastewater. APHA; New York, New York. 1193 p. (1976).

8. Gaudette, H. E., Flight, W. R., Toner, L., and Folger, D. W. "An Inexpensive Titration Method for the Determination of Organic Carbon in Recent Sediments." J. Sed. Petrology 44:249-253 (1974).

AR301438