133986
ORIGIN
(Red)

CDM FEDERAL PROGRAMS CORPORATION

May 10, 1991

Ms. Elaine Spiewak
TES VII Regional Project Officer
U.S. Environmental Protection Agency
841 Chestnut Street
Sixth Floor
Philadelphia, PA 19107

PROJECT: EPA CONTRACT NO: 68-W9-0004

DOCUMENT NO: TES7-C03099-EP-CGVY

SUBJECT: Work Assignment C03099
Welsh Road Landfill Site
Revised Field Investigation Plan
TES7-C03099-RT-CGVZ

Dear Ms. Spiewak:

Enclosed please find the Revised Field Investigation Plan for the Welsh Road Landfill site, in Honey Brook Township, Pa., as partial fulfillment of the reporting requirements for this work assignment.

If you have any questions regarding the above, please contact me at (215) 293-0450 within two weeks of this letter.

Sincerely,

CDM FEDERAL PROGRAMS CORPORATION (FPC)

Mark diFeliciantonio
Regional Manager

MdF:mal

Encl.

cc: Donna McCartney, EPA Work Assignment Manager, CERCLA Region III
Jean Wright, EPA TES VII Zone Project Officer (letter only)
Constance V. Braun, FPC Program Manager

992 Old Eagle School Road, Suite 919 Wayne, PA 19087 (215) 293-0450 (215) 293-1920 Facsimile

ORIG.
(Red)

WELSH ROAD LANDFILL SITE
REVISED FIELD INVESTIGATION PLAN

Prepared for

U.S. ENVIRONMENTAL PROTECTION AGENCY
Office of Waste Programs Enforcement
Washington, D.C. 20460

Work Assignment No.	:	C03099
EPA Region	:	III
Site No.	:	3B87
Contract No.	:	68-W9-0004
CDM FEDERAL PROGRAMS CORPORATION Document No.	:	TES7-C03099-RT-CGVZ
Work Assignment Project Manager	:	Christopher M. Cherniak
Telephone No.	:	(215) 293-0450
Primary Contact:	:	Donna McCartney
Telephone Number	:	(215) 597-1101
Date Prepared	:	May 10, 1991

AR300002

TABLE OF CONTENTS

Section		Page
1.0	INTRODUCTION	1
	1.1 Background	1
2.0	FIELD INVESTIGATION PLAN	2
	2.1 Task 1 - Site and Study Area Reconnaissance	2
	2.2 Task 2 - Evaluate and Select Field Subcontractor(s)	5
	2.3 Task 3 - Prepare and Mobilize Site	5
	2.4 Task 4 - Evaluation and Testing of Existing Monitoring Wells	6
	2.5 Task 5 - In-Situ Permeability Testing of Selected Existing Bedrock Monitoring Wells	8
	2.6 Task 6 - Salvage/Abandon Existing Monitoring Wells	11
	2.7 Task 7 - Drill and Test Pilot Bedrock Boreholes	12
	2.8 Task 8 - Install Additional Monitoring Wells	17
	2.9 Task 9 - Develop and Sample Salvaged and New Monitoring Wells	18
	2.10 Task 10 - Aquifer Performance Test	20
	2.11 Task 11 - Surface Water Evaluation	21
	2.12 Task 12 - Demobilize Site	22
	2.13 Task 13 - Draft Field Investigation Report	22
	2.14 Task 14 - Contract Administration, Reporting, Management and Cooperation	22
3.0	WORK SCHEDULE	24
4.0	PERSONNEL	27
5.0	ANTICIPATED SUBCONTRACTOR/CONSULTANT USE	30
6.0	EXCEPTIONS TO THE ASSIGNMENT/ANTICIPATED PROBLEMS	31
7.0	QUALITY ASSURANCE	33

ORIGINAL

TABLE OF FIGURES

Figure 1 - Existing Monitoring Well Locations 4

Figure 2 - Dual Packer Falling Head Test 10

Figure 3 - Proposed Well Retrofitting 13

Figure 4 - Proposed Monitoring Well Locations 14

Figure 5 - Proposed Bedrock Monitoring Well Construction 15

Figure 6 - Proposed Saprolite Monitoring Well Construction 19

Figure 7 - Task Performance Schedule 25

Figure 8 - Project Organizational Chart 29

TABLE OF TABLES

Table 1 - Existing Well Inventory Data 7

ATTACHMENT

Attachment A - Field and Equipment Needs and Methodology

ORIGINAL

1.0 INTRODUCTION

CDM FEDERAL PROGRAMS CORPORATION (FPC) received Work Assignment No. C03099 on May 9, 1990. The purpose of this assignment is to provide technical support to the EPA to perform and complete a Focused Groundwater/ Feasibility Study (FGW/FS) at the Welsh Road/Barkman Landfill site. This document addresses the requirements outlined in Tasks 7 and 8 of the original workplan dated August 1, 1990. These tasks outline the need to prepare and perform a focused field investigation at the site. The purpose of this field investigation is to define the hydrogeologic characteristics beneath the site and surrounding area; as well as the type, degree, and extent of contamination migrating (both horizontally and vertically) from the site. The results of this effort will then be used to support the preparation of the draft FGW/FS documents.

1.1 BACKGROUND

The Welsh Road/Barkman Landfill Site is located on approximately seven acres, near the top of Welsh Mountain in Honey Brook Township, Chester County, Pennsylvania. The site was operated as an unpermitted landfill until its closure in 1976. The original landfill covered approximately 1.5 acres on the southern portion of the site. At present, the surface of the landfill is covered with assorted vehicles, dumpsters, appliances, tires, batteries, tanks, drums, and other debris.

Inspections of this site by county and state agencies have resulted in numerous citations of non-compliance with municipal solid waste regulations. In addition, sampling of groundwater from area residential and monitoring wells have confirmed the presence of organic and inorganic contaminants. Preliminary studies have suggested that the site may be the source of this contamination. The site was placed on EPA's National Priorities List in September, 1984, and is presently operated as a solid waste transfer station and vehicle storage yard.

2.0 FIELD INVESTIGATION PLAN

This Field Investigation Plan (FIP) has been designed to define the groundwater characteristics at the Welsh Road Landfill Site. The results of this study will be used to support the preparation of a Focused Feasibility Study.

The objectives outlined for this project are to investigate the anisotropy of the aquifer beneath the Welsh Road Landfill, and to define both the vertical and horizontal extent of the contamination created by the disposal activities conducted at the site.

The FIP presented within the following twelve sections outlines the anticipated tasks and activities required to complete the proposed field work at the site. Supplemental field activity requirements are presented within Attachment A of this document. Additional field requirements will also be presented in the Quality Assurance Project Plan (QAPjP), and the Health and Safety Plan (HSP).

Subcontractors will be responsible for performing the field activities outlined within Tasks 4, 5, 6, 7, 8, 9, and 10 of this report. FPC staff will supervise field activities during the performance of Tasks 4 through 10 as well as complete Tasks 1, 2, 3, and 11 through 14.

2.1 TASK 1 - SITE AND STUDY AREA RECONNAISSANCE

Prior to the completion of the FIP and the Invitation for Bid (IFB) to candidate subcontractors, a reconnaissance of the site and surrounding study area will be performed. Representatives from the EPA and FPC will visit the site. The objective of this walk-through will be:

AR300006

1) Locate and mark the existing deep and shallow monitoring wells proposed for testing as shown on **Figure 1**;

2) Assess the general condition and accessibility of each of these wells;

3) Locate and mark proposed monitoring well sites (EPA 1-6); and,

4) Locate potential sites for a field office, equipment storage and decontamination area, and a temporary containment area for groundwater extracted during testing and drilling activities. Also, logistical needs such as access roads will also be identified.

Photographs and field notes will be taken to document these efforts. Field equipment and material required for this activity will include: a 35 mm waterproof camera with print film; field log book; organic vapor analyzer; and flags/stakes for identifying existing and proposed well locations. In addition, a copy of the approved Health and Safety Plan along with necessary credentials and any access agreements will also be brought to the site.

The information acquired will be used to define requirements for property access, equipment accessibility, and potential equipment and logistical limitations (e.g. interference from overhead or underground utilities). In addition, the time and effort required to address these issues can be more clearly defined and outlined within the revised cost estimate.

Note: This activity was performed on May 3, 1991. All tasks outlined above have been performed. The figures have been revised to reflect completion of this activity.

AR300007

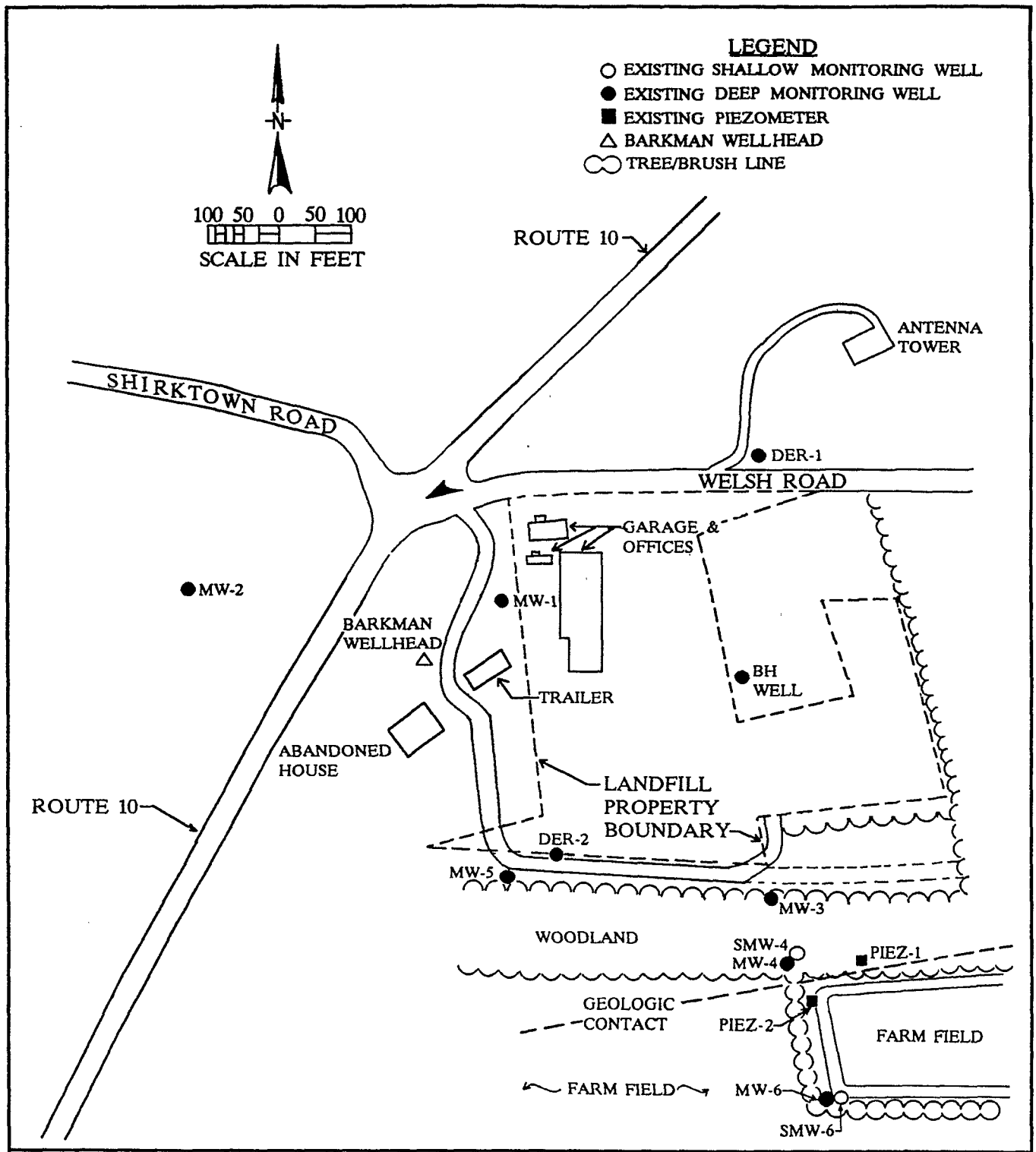

CDM FEDERAL PROGRAMS CORPORATION

EXISTING MONITOR WELL LOCATIONS

WELSH ROAD LANDFILL SITE

CHESTER COUNTY, PENNSYLVANIA

FIGURE NO.

1

AR300008

2.2 TASK 2 - EVALUATE AND SELECT FIELD SUBCONTRACTOR(S)

Invitations for Bid on the proposed field activities will be extended to candidate well drilling, installation, testing and surveying firms. If requested, a field trip to the site will be performed for the interested candidate firms escorted by FPC and EPA. Qualified proposals will be reviewed by EPA and FPC, and a field team consisting of either a single or multiple subcontractors will be selected and contracted. Permit requirements and applications to perform all proposed field work will be completed once contractual agreements are finalized.

2.3 TASK 3 - PREPARE AND MOBILIZE SITE

Concurrent to performance of Task 2, offsite preparations will be made. These include purchasing or renting necessary equipment (e.g. field office, portable sanitation facilities, pick-up truck, portable phone, generators, submersible pumps, etc.). In addition, necessary paperwork can be completed including access agreements and equipment rental or leasing agreements. Once the field team has been selected, field mobilization can begin. If a pre-bid field trip was not performed for the candidate subcontractors, the selected contractor(s) will visit the site with EPA and FPC to show them well site locations and field equipment staging areas. Required equipment and material will be delivered and staged onsite. If necessary, clearing of shrubbery and vegetation from the existing and proposed well sites and access roads will be performed. A field office will be established with the necessary electrical power, communications link, sanitation facilities and, if required, a water supply. Required operating permits (e.g., well construction, field office trailer) will be obtained and posted. Measures for securing equipment and material will also be established.

AR300009

ORIGINAL (Red)

2.4 TASK 4 - EVALUATION AND TESTING OF EXISTING MONITORING WELLS

The existing monitoring wells will be evaluated and tested to determine their integrity and worthiness. This task will involve the evaluation and testing of eight existing bedrock wells and one well of unknown status, surrounding the site. Ten wells had initially been scheduled for study. However, based on the site information gathered during Task 1, it was determined that DER-3 and DER-4 are inaccessible due to scrap material surrounding and/or covering the wells. However, a previously unknown monitoring well (BH Well) was located on the property which is surrounded by the site (see Figure 1). In addition, during the site visit, an abandoned potable well (Barkman Well) was located near well MW-1. These wells will be included within the proposed activities outlined within this task.

Prior to any field work, the field notes and logs recorded during the construction of the existing monitoring wells will be reviewed. Well log data for monitoring wells MW-1 through MW-6 have been obtained from the drilling company which installed these wells. The December 8, 1988 Remedial Investigation Report prepared by SMC Martin Inc. includes a well inventory for those wells cited above and the four DER bedrock wells proposed for study, (DER 1 - 4). Specific well logging records for monitoring wells DER 1-4 was not available from the offices of the Pennsylvania Department of Environmental Resources (PADER). Table 1 outlines the existing well log inventory. No records were available for either the Barkman or BH Well's.

The initial field activity will involve geophysical testing within the eight bedrock monitoring wells and the Barkman and BH wells. This testing will include cement bond logging of the cased sections of the wells, caliper logging and single-point resistivity measurements of the uncased sections of the wells, and natural gamma logging of the entire well. Well casing impedes the collection of data with caliper and single-point

AR300010

WELSH ROAD LANDFILL SITE

EXISTING WELL INVENTORY DATA

Well I.D.	Total Depth (feet)	Depth to Bedrock (feet)	Length of Casing (feet)	Open Hole or Screened Interval (feet)	Well Diameter (inches)	PVC Casing Stick-up (feet)	Ground Elevation (feet/MSL)	Top of Casing Elevation (feet/MSL)	Approximate Well Yield (GPM)	Formation Screened
MW-1	135.0	12.0	22.0	113.0	6.0	0.60	912.90	913.94	30	Hellam Conglomerate
MW-2	200.0	12.0	22.0	178.0	6.0	0.80	962.01	963.06	1.5	Hellam Conglomerate
MW-3	130.0	38.0	48.0	82.0	6.0	1.52	880.44	881.96	6.5	Hellam Conglomerate
MW-4	150.0	90.0	102.0	48.0	6.0	0.73	845.22	846.20	30	Hellam Conglomerate
MW-5	116.0	28.0	38.5	77.5	6.0	0.60	888.70	889.59	30	Hellam Conglomerate
MW-6	145.0	75.0	85.0	60.0	6.0	0.85	818.13	819.14	6	Granodiorite
PIEZ-1	150.0	95.0	107.0	37.0	6.0	0.65	842.33	843.29	30	Hellam Conglomerate
PIEZ-2	150.0	80.0	95.0	55.0	6.0	0.71	831.78	830.81	1.5	Granodiorite
SMW-4	47.5	----	32.5	15.0	4.0	1.50	845.71	844.08	<1.0	Overburden
SMW-6	50.0	----	35.0	15.0	4.0	1.48	817.65	819.30	<1.0	Overburden
DER-1	107.0	30.0	80.0	28.0	4.0	0.30	937.74	937.94	10	Hellam Conglomerate
DER-2	103.0	ND	55.0	48.0	6.0	1.65	ND	892.03	ND	Hellam Conglomerate

KEY

ND - No Data
-- - Not Applicable
MW - Bedrock Monitoring Wells
PIEZ - Piezometer
SMW - Overburden Monitoring Wells
DER - Monitoring wells installed previously by DER

Note: No well inventory data available for Barkman and BH wells.

resistivity devices. However, natural gamma and cement bond logging instruments can penetrate a well casing, providing information on the wells structural integrity along with the surrounding geology. The cement bond logs will be analyzed by an experienced subcontractor conducting the geophysical investigation. A detailed description of each proposed test is presented within Attachment A.4 - Monitoring Well Inspection and Testing.

Following a review of the geophysical testing results, a downhole television camera inspection of up to eight bedrock wells, the Barkman well, and the two shallow monitoring wells (SMW-4 and SMW-6) will be performed. This inspection will be performed to visually evaluate; 1) the internal integrity of the existing PVC casings of each well (e.g. cracks, leaks, casing plumb), and 2) the geology and hydrogeology of the gneissic and quartzitic bedrock present in the uncased portions of the deep monitoring wells (the two shallow wells are supposedly screened). Special attention will be directed to those areas where the geophysical testing suggests the presence of either water bearing or impermeable zones within the bedrock.

It should be noted that the presence of turbid water within a well may preclude the use of a downhole camera inspection. If this occurs, brief pumping of the well will be performed to facilitate clarifying the water. The purge water will be collected and disposed of in accordance with the Pennsylvania Department of Environmental Resources (PADER).

2.5 TASK 5 - IN-SITU PERMEABILITY TESTING OF SELECTED EXISTING BEDROCK MONITORING WELLS

Following the performance of Task 4, representatives from EPA, PADER, FPC and the field performance team will meet to discuss the downhole camera information and geophysical test results. Each person scheduled to attend will receive a copy of the geophysical test results three days prior to the

AR300012

meeting date. An interpretation of the well logs and the proposed zones to be analyzed with in-situ permeability tests will be provided. This document will be submitted three days prior to the meeting in order to provide sufficient time for review and personal interpretation.

The borehole videos will be edited and presented during the meeting, and combined with the previously submitted geophysical logs. The videos, in conjunction with the borehole logs, will be used to identify candidate wells where a zone or zones of high hydraulic conductivity anomolies may be present.

Once identified, in-situ permeability tests will be performed within these well zones. The number, position, and interval length of each test will be finalized during the meeting.

The in-situ permeability tests will be conducted to further evaluate the fracture zones identified during the geophysical and camera evaluation. Each fracture zone identified will be subjected to a falling head test with dual packer equipment as shown on **Figure 2**. The hydraulic conductivities of the water bearing zones will then be measured. While the zone is isolated with the equipment, groundwater samples will be removed from the interval and analyzed for TAL and TCL parameters. The in-situ tests will help define the anisotropy of the aquifer by quantifying hydraulic conductivities of fracture zones and the sample analysis will reveal the extent and/or concentration of contamination.

Testing within each candidate well will commence with the deepest suspected zone of permeability. Submerged equipment will be decontaminated between each well. Details of the in-situ test methodology are presented within Attachment A.4.

~~[illegible] packer testing~~
- Terminate sampling
- " packer testing

Bruce
- Purge once-sample → qualitative use only
- Packer wells w/ higher concentrations
look at highest yield zones - from RI - go for these

Start drilling pilot holes - see how fast it goes (let packers continue - see if any useful data comes up) After we see how drilling goes - then decide whether to stop packer tests

AR300013

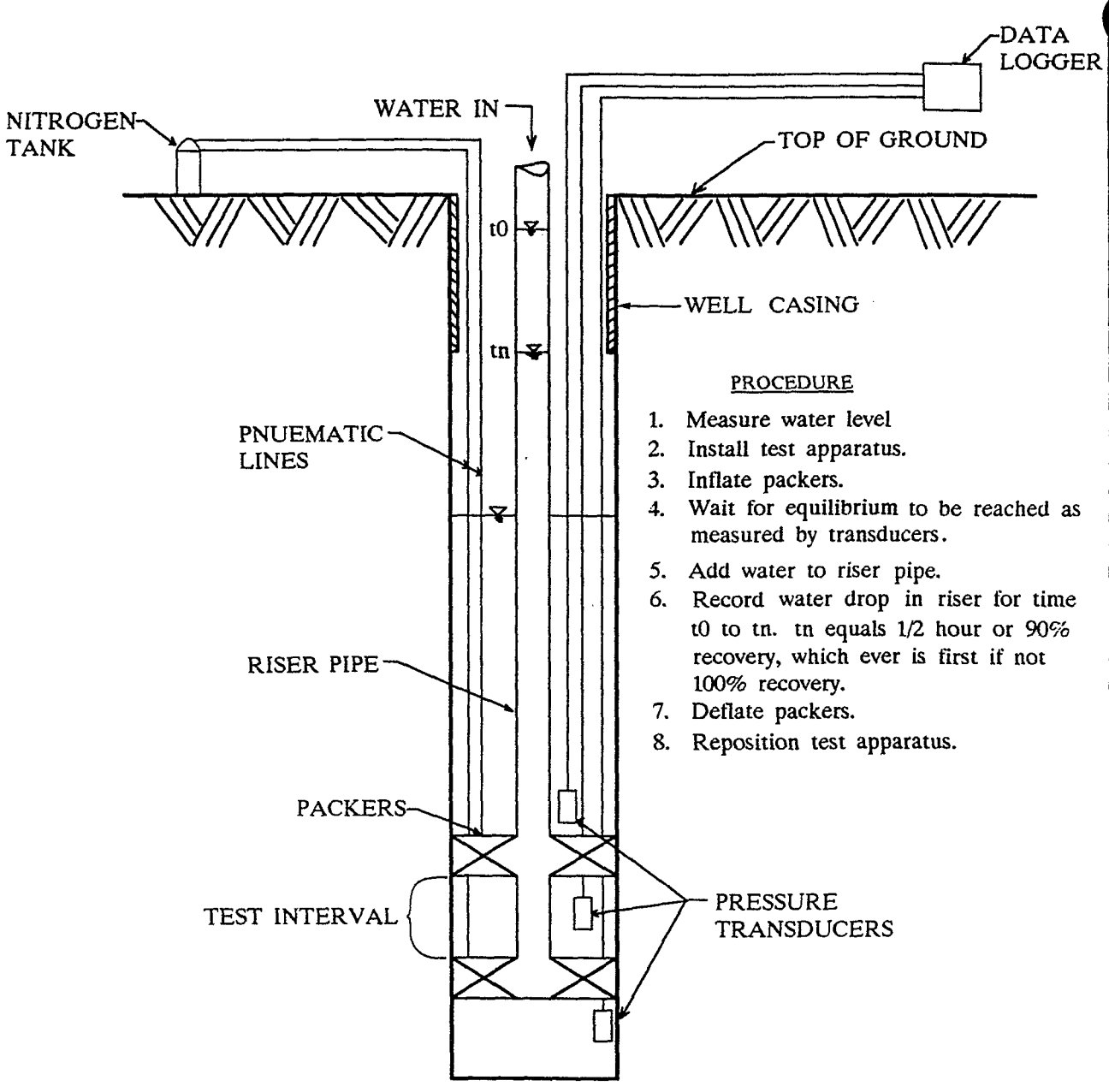

PROCEDURE

1. Measure water level
2. Install test apparatus.
3. Inflate packers.
4. Wait for equilibrium to be reached as measured by transducers.
5. Add water to riser pipe.
6. Record water drop in riser for time t0 to tn. tn equals 1/2 hour or 90% recovery, which ever is first if not 100% recovery.
7. Deflate packers.
8. Reposition test apparatus.

CDM FEDERAL PROGRAMS CORPORATION

DUAL PACKER FALLING HEAD TEST

WELSH ROAD LANDFILL SITE

CHESTER COUNTY, PENNSYLVANIA

FIGURE NO.

2

2.6 TASK 6 - SALVAGE/ABANDON EXISTING MONITORING WELLS

Upon completion of the above outlined tests and evaluations, EPA, PADER and FPC will evaluate the results during a joint meeting. A decision will then be made with respect to the future need of the eight existing bedrock wells, two shallow monitoring wells and the Barkman and BH wells. The decision to salvage or abandon a well will be based on the test results, the well casing and borehole condition, and its potential usefulness. Following this decision, a brief letter report will be prepared. The report will include a proposed method or approach to the salvaging or abandonment of the existing wells. The letter report will detail the rationale (i.e., specific criteria used in evaluating each well's conditions) for each proposed action at each tested location.

Salvaging a well could be accomplished through either redevelopment or retrofitting an existing well with a completely new monitoring well system (e.g. installing a two inch monitoring well system within an existing four or six inch casing). If multiple transmissive zones are located, FPC and EPA will decide which zone to screen. Conversely, if only a single transmissive zone is located, the well may not require any retrofitting and will therefore be left intact.

All wells determined not to be salvageable will be abandoned under this task via approved well closure methods. The wells will be abandoned prior to drilling test pilot boreholes, which are described under Task 7. A description of the proposed methodology, equipment and material requirements to perform both salvaging and abandonment operations are outlined in Attachment A, Sections A.6 and A.7. Salvaging/abandonment activity will not be considered complete until approved by FPC.

AR300015

Although the decision to either salvage or abandon any of the existing wells can not be made until the field testing program is complete, FPC's project cost estimate will include the time and cost required to retrofit, secure and develop all ten of the existing unscreened wells (MW-1 through MW-6, DER-1, DER-2, and the Barkman and BH wells). DER-1 would be fitted with a two inch well, the remainder would be fitted with a four inch diameter monitoring well system as depicted in **Figure 3**. In addition, the time and cost required to redevelop the two screened shallow monitoring wells SMW-4 and SMW-6 will also be included within the project's cost estimate.

2.7 TASK 7 - DRILL AND TEST PILOT BEDROCK BOREHOLES

Once field activities for the existing monitoring wells have been completed, the drilling, testing and installation of new monitoring wells will begin. Initially, up to six bedrock boreholes, or pilot holes, may be drilled at predetermined offsite locations using air rotary or air percussion drilling methods. The proposed locations of these wells are shown on **Figure 4**, and are designated as EPA-1 through EPA-6. It should be noted that due to their proximity, the need to drill pilot hole EPA-2, may not be required if the information provided during the testing of MW-1 is sufficient to define the geologic and hydrogeologic conditions in these areas.

As shown on **Figure 5**, the diameter of the pilot holes will be twelve inches through the overburden and will extend through the saprolite and into the surface of the bedrock. If necessary, this twelve inch section will be cased with an eight and three-quarter inch galvanized steel casing to prevent well collapse during bedrock drilling and testing. Once the overburden is determined to be secure, an eight inch diameter borehole will be drilled through the remainder of the bedrock to the proposed depth. The proposed depth of each pilot hole will be determined prior to the

AR300016

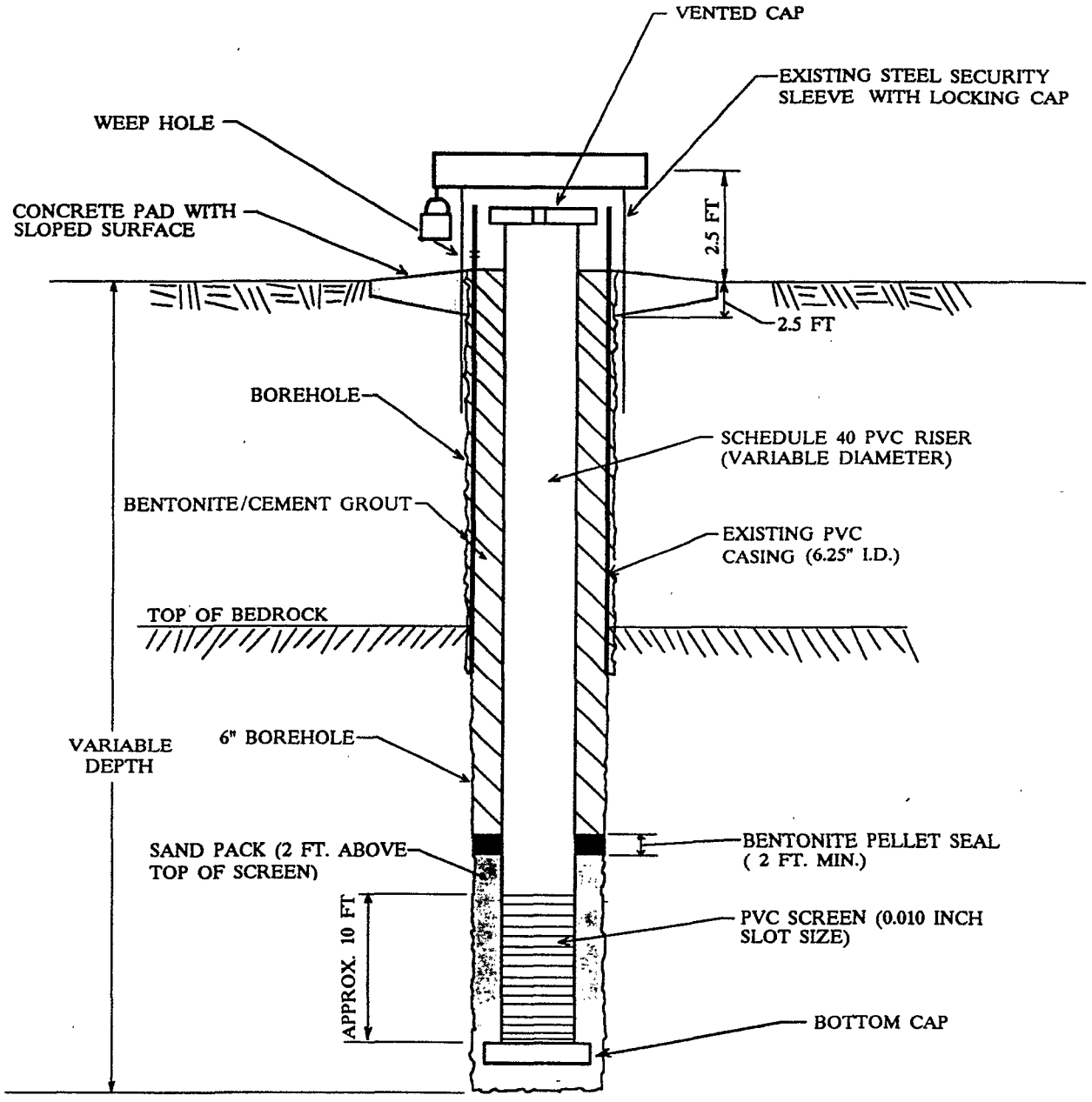

CDM FEDERAL PROGRAMS CORPORATION

PROPOSED WELL RETROFITTING

WELSH ROAD LANDFILL SITE

CHESTER COUNTY, PENNSYLVANIA

FIGURE NO. 3

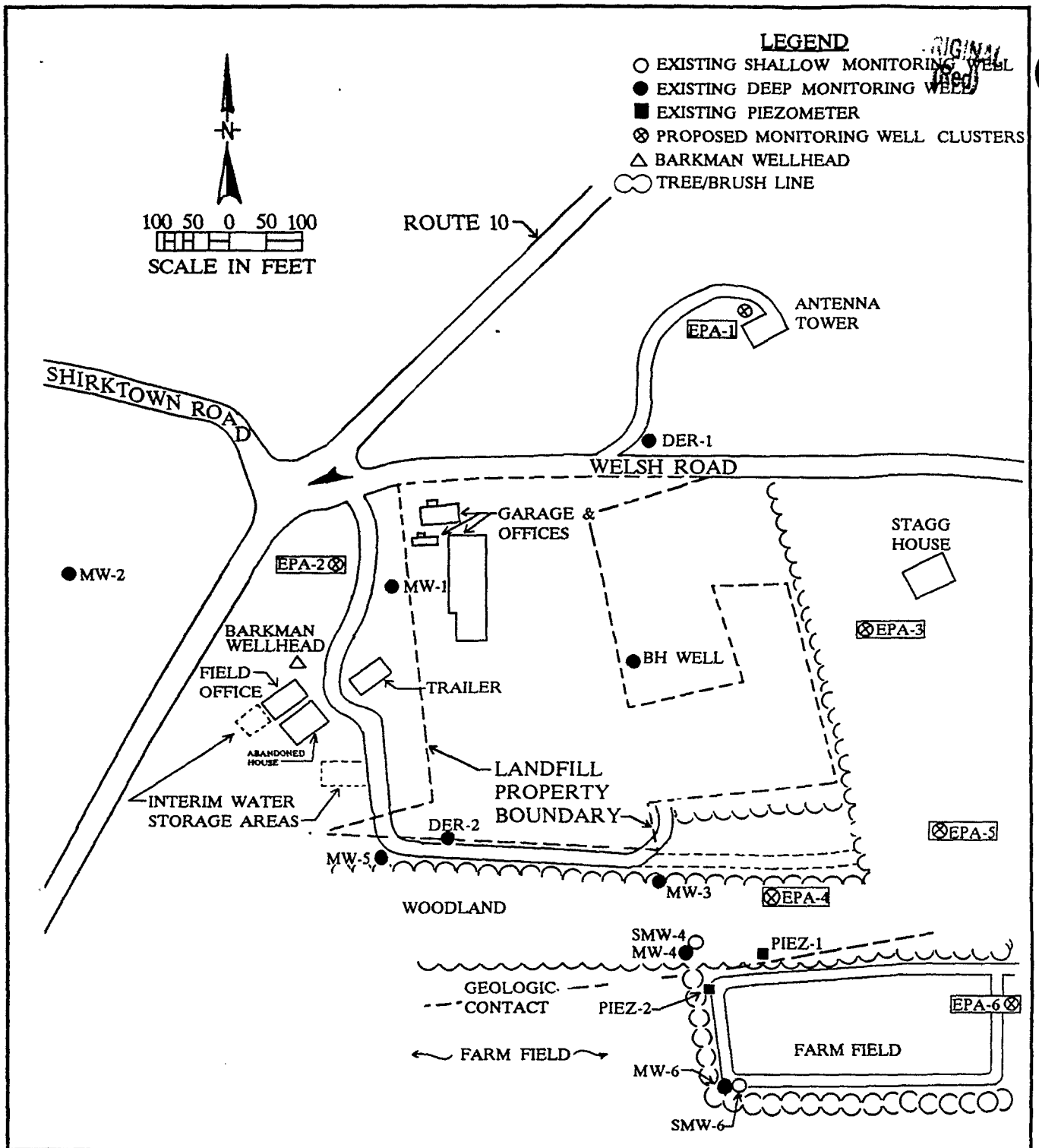

CDM FEDERAL PROGRAMS CORPORATION

PROPOSED MONITOR WELL CLUSTER LOCATIONS

WELSH ROAD LANDFILL SITE

CHESTER COUNTY, PENNSYLVANIA

FIGURE NO. 4

AR300018

ORIGINAL (Red)

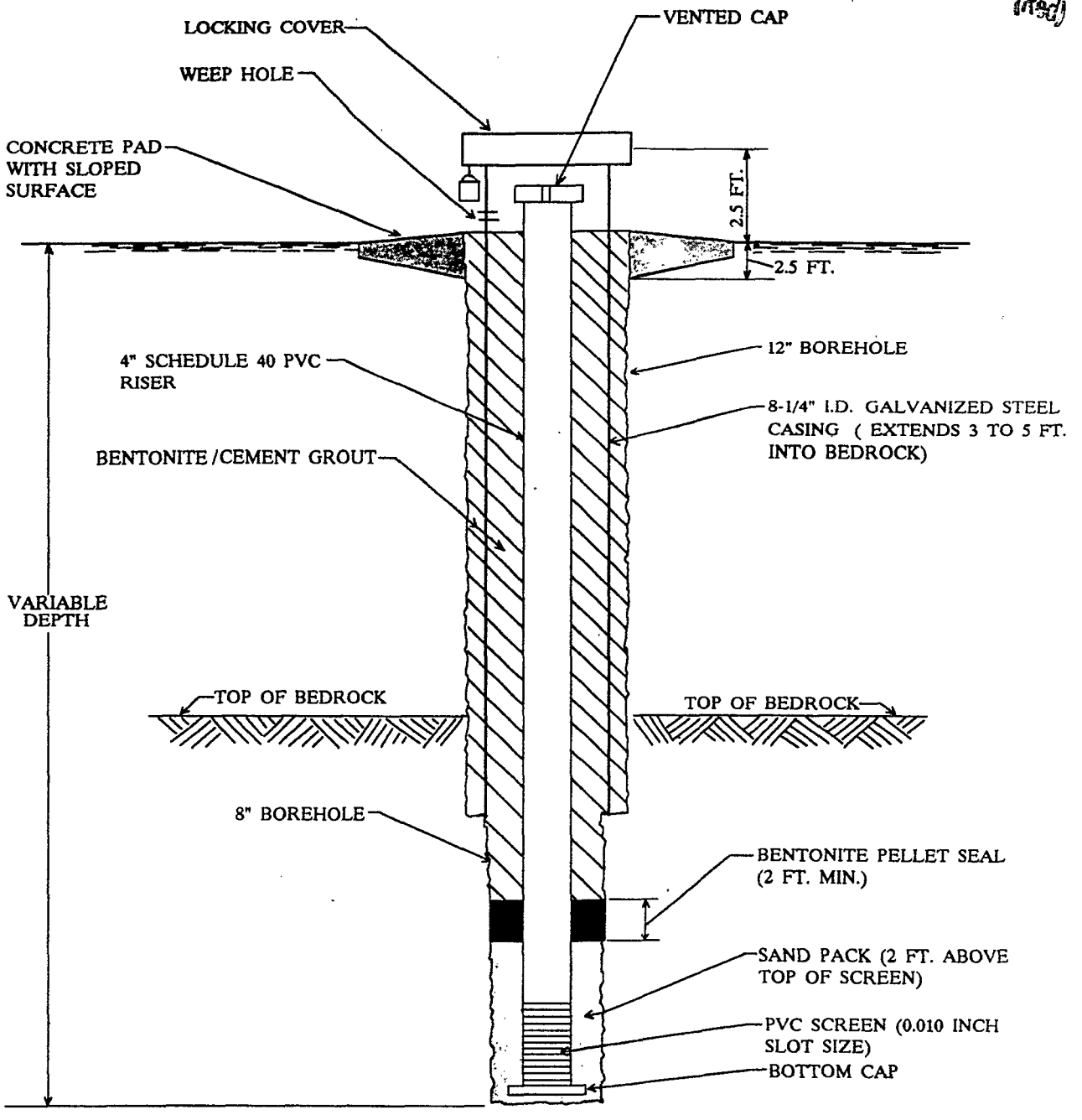

CDM FEDERAL PROGRAMS CORPORATION PROPOSED BEDROCK MONITORING WELL CONSTRUCTION **WELSH ROAD LANDFILL SITE** CHESTER COUNTY, PENNSYLVANIA	FIGURE NO. **5**

AR300019

ORIGINAL (Red)

commencement of this task, but should range between 150 and 200 feet below ground surface (depending on the depth of the suspected saturated zone). Any groundwater emitted from the well during drilling activities will be contained and disposed of accordingly. A detailed discussion of the proposed drilling methods and approach is presented in Attachment A.6.1.

During drilling, if the water table is present within the overburden saprolite samples of the saprolite will be collected both above and below the saturated zone. These soil samples are proposed to be collected from well location EPA-4. However, other well locations may be sampled if EPA-4 does not contain a saturated saprolite.

The samples will be analyzed for organic and inorganic content as well as geotechnical characteristics (e.g., density, soil type, cation exchange capacity, particle size distribution). Analysis of the saprolite will provide insight into the groundwater movement through it, and the contaminant attenuation characteristics of the soil. Details of this activity are presented within Attachment A.5. A geologist will supervise and photograph the drilling activities and record any changes in the penetration rate and the cuttings' lithology. Changes in drilling methodology or field activity will also be noted and recorded.

Once bedrock drilling is completed, the well will be prepared for geophysical testing and downhole camera evaluation by developing the well, if necessary, until a clear and non-turbid groundwater is emitted from the hole. This activity will provide enhanced viewing conditions during the downhole camera investigation.

The testing methods outlined in Task 4 and Attachment A will also be employed on these pilot holes. This will include a visual inspection of the boreholes saprolite (if possible) and bedrock wall using the downhole camera apparatus, and geophysical logging using natural gamma, caliper, and single-point resistivity testing apparatus (cement bond logging not included).

AR300020

Based on the information provided by the downhole camera and geophysical logging, in-situ permeability tests will then be performed at selected intervals within each pilot hole. This test will more clearly define the potential transmissive zones within both the overburden (if possible) and bedrock sections of each pilot hole. EPA and FPC will determine the number and depth of in-situ permeability tests to be performed within each pilot hole.

-delete packer tests on pilot holes.

2.8 TASK 8 - INSTALL ADDITIONAL MONITORING WELLS

The results of the pilot hole tests will be presented and discussed at a meeting between EPA, PADER and FPC. Three days prior to this meeting, a summary of the results from the pilot borehole tests described under Task 7 will be submitted to the representatives scheduled to be in attendance. The submittal will also outline the proposed number, location and screen depth of additional wells. The proposal will provide the rationale and objectives for the well activities, and a statement regarding how the activities will meet the objectives of the study.

The edited video tapes of the boreholes will be presented during the meeting. PADER, EPA and FPC representatives will discuss the data interpretation and the proposed monitoring wells. The number, location and screen depths of the additional wells will be finalized during this meeting.

It is anticipated that a maximum of two additional monitoring wells (intermediate and shallow) may be installed at each of the six pilot borehole locations. The pilot holes will serve as the deep well for each proposed well cluster. If only one transmissive zone is identified at a pilot hole location, then the pilot hole will be screened at that zone and no additional wells will be installed.

AR300021

ORIGINAL (Red)

At least one saprolite well is proposed to be installed at either EPA-4 or 5. This would be considered the shallow well of the proposed cluster. Figure 6 presents a schematic for the construction of a saprolite well. In addition, if shallow and intermediate wells are required, they will be installed but not tested or evaluated as were the pilot holes. The additional wells will be drilled and installed using the same approach and methodology as outlined in Task 7 and Attachment A of this report.

Once all existing and new wells have been retrofitted and installed, (by a Chester County liscensed driller) each will be surveyed for vertical and horizontal grid locations by a licensed surveyor. Once completed, the surveyor will forward a Water Well Inventory Report to the Bureau of Topographic and Geologic Survey in Harrisburg, PA.

2.9 TASK 9 - DEVELOP AND SAMPLE SALVAGED AND NEW MONITORING WELLS

Following the installation of the new monitoring well clusters, all of the salvaged and new monitoring wells will be developed, purged and both filtered and unfiltered groundwater samples collected. In addition, selected residential wells within the area will be sampled and analyzed for similar constituents.

The overpump method will be used to develop the wells. Once developed, the wells will remain undisturbed for a minimum of 48 hours. Each well's static water level will be measured prior to purging and sampling activity. Groundwater samples will then be collected and sent to the EPA CRL laboratory for complete TAL/TCL analyses using the 500 series analytical method. EPA, or its contractors will also be responsible for validating the sampling results. A detailed description of the proposed well development, purging, and sampling methodology and protocol is presented in Attachments A and the Quality Assurance Project Plan.

→Try to push up Resid. sampling
-Select locations to be sampled
9/24 discussed

AR300022

ORIGINAL (Red)

SAPROLITE MONITORING WELL CONSTRUCTION DIAGRAM

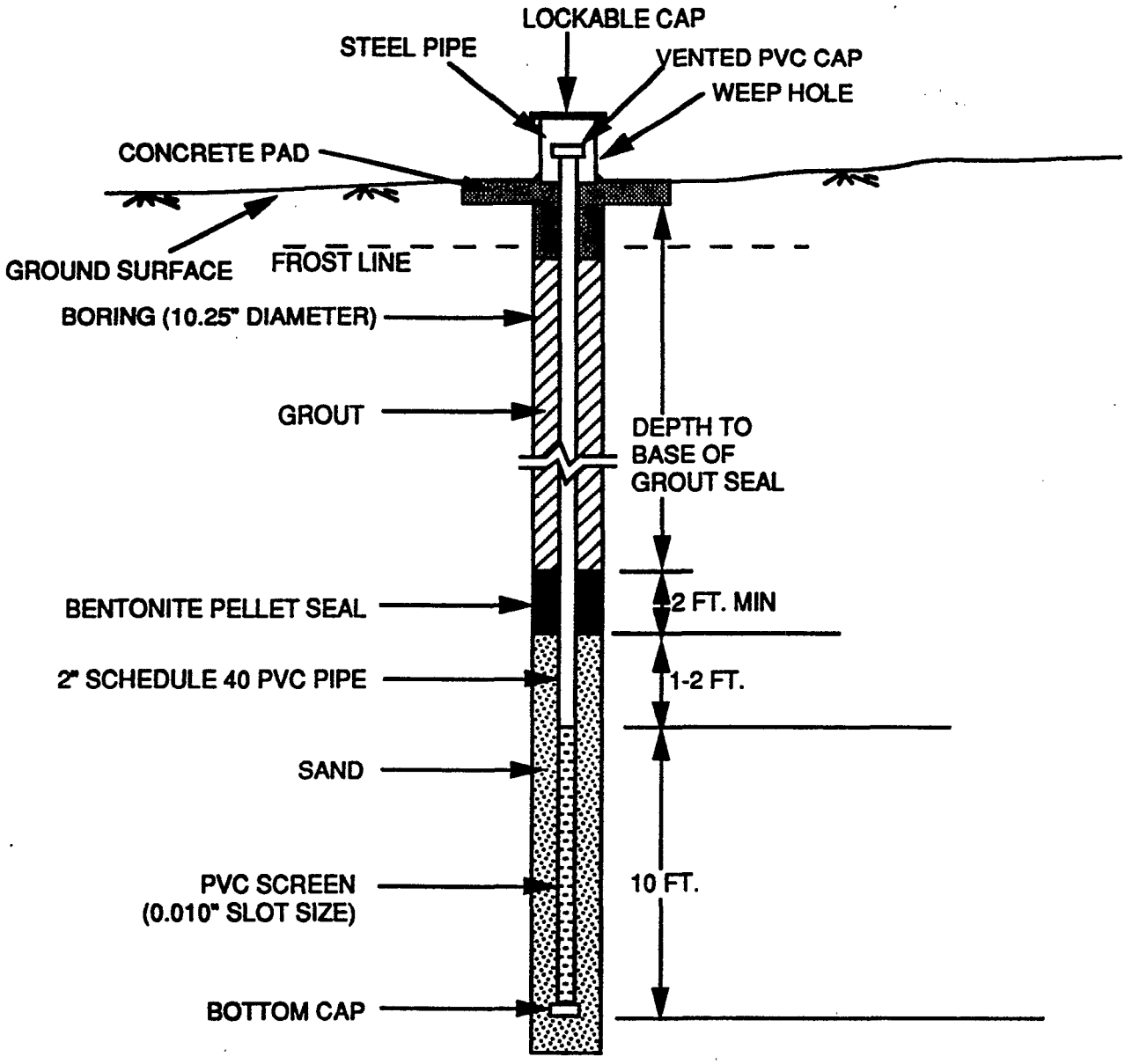

NOTE: All PVC pipe will have flush-threaded joints

FIGURE 6

CDM FEDERAL PROGRAMS CORPORATION

The drilling firm will perform the well development. All water collected during well development will be contained and disposed of in a controlled manner. FPC staff will be responsible for field oversight during well development in addition to measuring static water levels, and purging and sampling the wells.

The results from this sampling will be used to quantify the extent and degree of site-related groundwater contamination. Additional rounds of sampling and water level measurements may be performed to assess seasonal variations on water levels, hydraulic gradients, and groundwater flow directions. The decision to perform these additional rounds of sampling and water level measurements will be at the direction of the EPA.

2.10 TASK 10 - AQUIFER PERFORMANCE TEST

An aquifer performance test (APT) will be performed following the completion of groundwater sampling activities. The APT will be performed at the unscreened pilot hole at location EPA-4. The purpose of the APT will be to define vertical and horizontal groundwater movement in the area as well as the effects which the geologic contact may have on groundwater movement within the area. Groundwater will be withdrawn from this well using a submersible pump at a constant rate for either a measured period of time or when confirmed responses are recorded within the surrounding monitored wells.

Static water levels will be measured within the surrounding wells prior to the start of the test. Following this, a step test will be performed within the EPA-4 pilot well. The step test involves pumping water from the well at varying pumping rates in order to determine a suitable pumping rate for the APT. The step test can be completed within approximately one day. The well will then remain undisturbed for approximately 24 hours once the step test is completed to allow enough time for all the monitored wells to return to their pre-step test water levels.

AR300024

ORIGINAL (Red)

Once static water level conditions are established, the APT can commence. Wells surrounding EPA-4 will be monitored for changes in water levels using automatic data loggers. However, the exact number and well locations to be monitored will be determined prior to the start of the test.

Pumping and monitoring will continue until a reduction in water levels in each of the monitored wells is confirmed, or for 72 hours, whichever comes first. The pump at EPA-4 will then be shut off. Monitoring of water levels during the recovery phase will then proceed until water levels in all of the wells return to pre-APT levels.

All groundwater pumped from the pilot hole EPA-4 during the step test and APT will be controlled and disposed of in accordance with applicable PADER requirements.

The selected field team will be responsible for performing the necessary field work during this task, while FPC staff will perform oversight of the ongoing activities. Upon completion of the APT, EPA and FPC will decide to either screen or abandon the tested pilot hole. The drillers will then be responsible for performing either activity.

→ Try to push up - to get seasonal data on H_2O levels
- Gauges to be supplied by testing subcontractor

2.11 TASK 11 - SURFACE WATER EVALUATION

The purpose of this task is to determine if the three ponds, which are located in a range of approximately 1,400 - 2,800 feet south of the site, are groundwater discharge zones for the contaminated aquifer. The ponds were classified in the December 8, 1988 RI Report as "spring-fed ponds."

FPC will characterize the nature of the ponds and the feeder water in three activities. First, a visual inspection of the ponds will be conducted at the site to observe their appearance and location. The property owner will also be contacted for information. The site observations in conjunction with a review of aerial photographs and geological maps will be used to determine the type and source of the ponds, (e.g., depression, contact or fracture springs).

Sample springs - feeders to ponds -
T. Styer spring - bkgd. data

Second, samples will be collected from the ponds nearest the potential source or inflow. A sample will be collected from each pond; it is anticipated that three locations will be sampled. TCL organics, TAL metals and TAL filtered metals will be collected at each location. This activity will occur during the groundwater sampling task.

Lastly, a stream gauge will be installed at each pond prior to the aquifer performance test (APT). The gauges will be checked four times per day during the APT and the water level will be recorded. Any ambient fluctuations will be noted during the APT. If a response occurs from the test, it is anticipated to be observed with this monitoring schedule. Following the completion of the APT, monitoring will continue for two days at four times per day to check on any lag responses.

2.12 TASK 12 - DEMOBILIZE SITE

The site will be demobilized upon the completion of Tasks 1 through 10. EPA will determine when the field work is complete. Demobilization of the site will include final securing of all salvaged and new monitoring wells. Equipment and materials will be removed from the site. Power and all other services will then be disconnected and the field office closed or removed.

2.13 TASK 13 - DRAFT FIELD INVESTIGATION REPORT

A draft field report compiling all field work tasks and activities performed will be prepared and include photographs, copies of log books, problems encountered and documentation of daily field activities and testing. Laboratory results for groundwater and soil analyses will also be included within the report, as an attachment, upon receipt from EPA CRL.

2.14 TASK 14 - CONTRACT ADMINISTRATION, REPORTING, MANAGEMENT AND COOPERATION

In addition to the reports described in Tasks 1 through 13 of this Work Plan, FPC will provide a TES VII required monthly progress report to the EPA by the 21st of each month.

ORIGINAL (Red)

In summary, the report will include a description of the progress made and problems encountered during the previous month, and the anticipated work for the next reporting period.

EPA will be updated at a minimum of twice a week during the course of the investigation fieldwork. The updates will be provided in either of two formats. One format will be to call and inform the EPA Work Assignment Manager of any encountered problems and their resolutions and the current status of the fieldwork. The second format will be to hold a meeting with the EPA Work Assignment Manager and any relevant agents to discuss fieldwork progress. Bi-weekly contact is only proposed at a minimum. It is anticipated that more contact than twice per week will be needed to effectively relay information to the EPA.

The management and coordination portion of this task will ensure that EPA has the direct access and the FPC team management necessary to ensure the successful completion of this project.

AR300027

3.0 WORK SCHEDULE

The proposed schedule and timeframes of the tasks outlined in Section 2.0 are presented in **Figure 7**. This schedule will be updated and a detailed field schedule will be submitted to EPA after Task 3 is completed. The following assumptions were included in estimating the anticipated schedule of performance:

- Task 2 includes a two week period for both FPC and EPA staff to review and comment on the subcontract bid packages.

- Task 3 includes the time to perform a pre-bid field trip for the candidate subcontractors.

- Tasks 4 and 5 include a complete evaluation and testing of eight deep wells and the recently located Barkman and BH wells. These tasks also include performing natural gamma and cement bond logging, and, downhole camera evaluations of the two shallow wells (SMW-4 and SMW-6).

- Task 6 includes the time to retrofit all eight deep wells and the Barkman and BH wells with well risers, screens, grout, caps, etc.

- Task 7 includes the time to drill all six pilot bedrock boreholes.

- Task 8 includes installing a four inch monitoring well system within the pilot boreholes, and drilling, and installing an intermediate and shallow monitoring well system at each proposed well cluster (EPA 1 through 6).

- In-situ permeability testing assumes three zones tested per well at 3.5 hours per zone. This includes work on the eight existing deep wells, the Barkman and BH wells and the six pilot holes.

AR300028

FIGURE 7

WELSH ROAD LANDFILL - TASK PERFORMANCE SCHEDULE

TASK	MAY				JUNE				JULY				AUGUST				SEPTEMBER				OCTOBER				NOVEMBER				DECEMBER			
	1	2	3	4	1	2	3	4	1	2	3	4	1	2	3	4	1	2	3	4	1	2	3	4	1	2	3	4	1	2	3	4
1. Site & Study Area Reconnaissance	X																															
2. Evaluate & Select Subcontractors (IFB Process included)		X	—	—	—	X																										
3. Prepare & Mobilize Site					X	—	X																									
4. Evaluation & Testing of Existing Monitoring Wells - Test Results Meeting							X	—	X																							
										*						X																
5. In-Situ Permeability Test - Test Results Meeting										X	—	X					X															
													*																			
6. Salvage/Abandon Existing Monitoring Wells														X	—	X		X	—	X												
7. Drill & Test Pilot Bedrock Boreholes - Test Results Meeting															X	—	—	X	—	X												
																			*													
8. Install Additional Monitoring Wells																				X	—	—	—	X								
9. Develop & Sample Monitoring Wells																							X	—	—	X						
10. Aquifer Performance Test (APT)																										X	—	X				
11. Surface Water Investigation																							X				X					
12. Demobilize Site																												X				
13. Draft Field Investigation Report																										X	—	—	—	—	X	

* denotes meeting with EPA and PADER

Ecological Survey work - 9/23 rec'd
TES Amendment -
Revise/Amend FIP

AR300029

- Pilot holes are assumed to be 200 feet in depth. Intermediate wells are 180 feet and shallow wells are 150 feet in depth.

- Eight retrofitted deep wells, two shallow wells, the Barkman well and seventeen additional wells (less the pilot hole at EPA-5) are assumed to be developed and sampled per Task 9. The pilot hole at EPA-5 will be screened and developed following the APT of Task 9.

- Surveying of the wells must be completed prior to the commencement of Task 10.

- Task 10 - Aquifer Performance Test is scheduled to take at least one week to complete: one day for mobilization, one day for the step test, one day for review and APT set-up, at least three days for the performance of the APT, and one day to de-mobilize.

- All drilling and well installation assumes the use of only one drill rig onsite. If time constraints warrant, efforts will be made to bring a second rig onsite.

AR300030

4.0 PERSONNEL

TES VII Regional Manager

Mark DiFeliciantonio, Regional Manager (P4)

(215) 293-0450

Work Assignment Manager, Work Assignment No. C03099

Christopher Cherniak, Environmental Engineer (P3)

(215) 293-0450

Project Staff

RoseMary Ellersick	Quality Assurance Director	(P4)
Andrew Szilagyi	Health and Safety Director	(P4)
John Young	Hydrogeologist	(P4)
Kathy Garris	Environmental Engineer	(P3)
Susan Insetta	Environmental Scientist	(P3)
Bruce Pluta	Environmental Scientist	(P3)
Mark Taylor	Water Resources Engineer	(P3)
Hope Eiseman	Geologist	(P2)
Dave Schroeder	Environmental Scientist	(P2)
Andrew Hopton	Environmental Scientist	(P2)
Sharon Schaeffer	Environmental Scientist	(P2)
Mary Jo Apakian	Environmental Engineer	(P1)
Aaron Frantz	Geologist	(P1)
Jim Romig	Environmental Engineer	(P1)

AR300031

ORIGINAL (Red)

Christopher Cherniak will be FPC's Project Manager for this work assignment and will be responsible for tracking the project's budget, schedule and field activity performance. He will also be responsible for maintaining necessary FPC staff at the site, as well as reporting project status and anticipated problems to the EPA WAM. Aaron Frantz will serve as Field Team Leader during onsite activities. Rosemary Ellersick and Andy Szilagyi will be responsible for final review of the project's QAPjP and HSP respectively. John Young and Mark Taylor will provide assistance in reviewing geophysical and in-situ permeability test results. Bruce Pluta, Hope Eiseman, Andrew Hopton, Dave Schroeder, and Sharon Schaeffer are all Health and Safety trained at a Level C supervisory grade. At a minimum, one of these six people will be required to be onsite at each active well location, in order to satisfy Health and Safety contingency protocols. The remainder of those listed individuals will provide assistance and support during oversight activities and off site report and document preparation. A detailed organizational chart is presented in Figure 8.

AR300032

Figure 8

PROJECT ORGANIZATION CHART

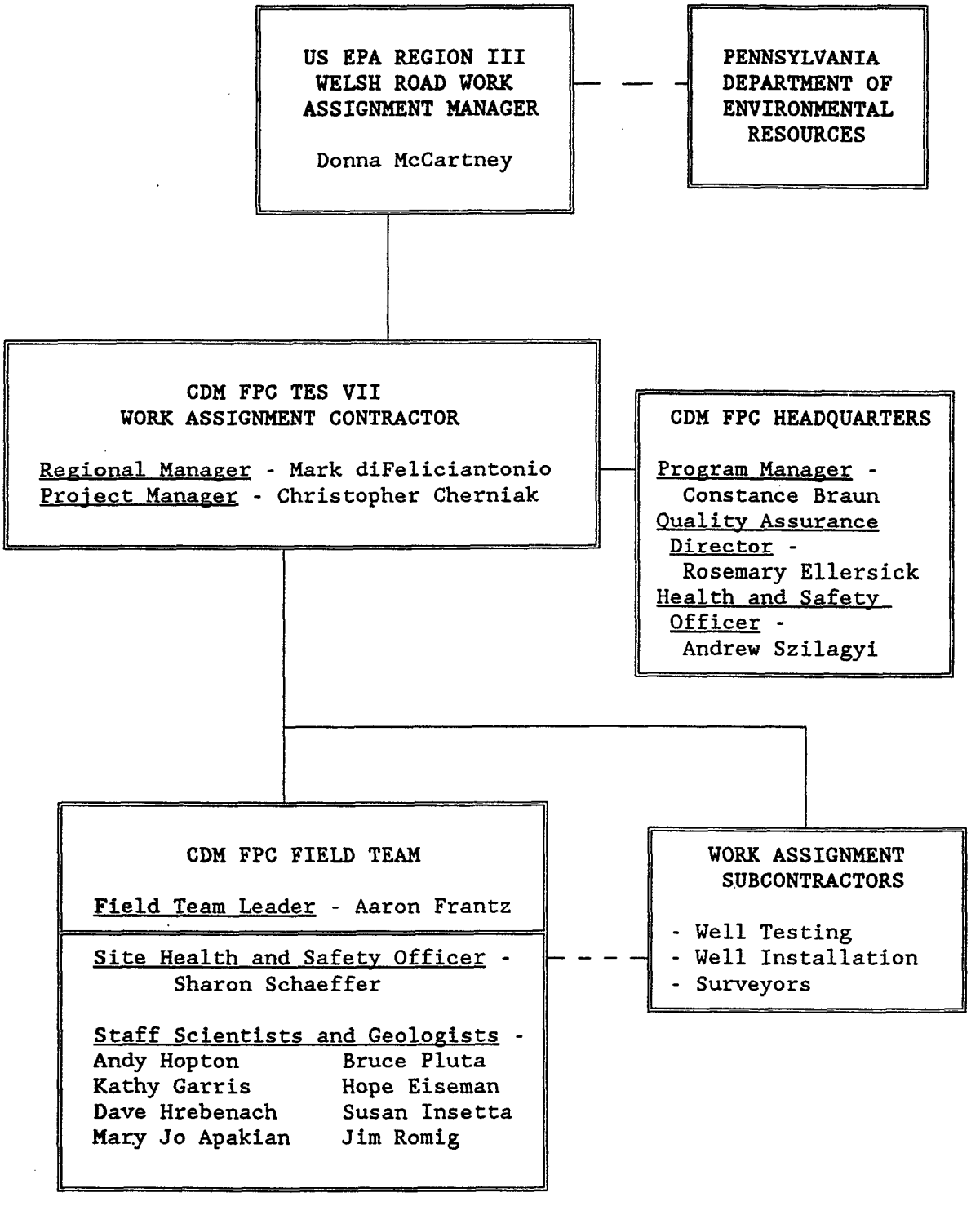

AR300033

5.0 ANTICIPATED SUBCONTRACTOR/CONSULTANT USE

Subcontractors will be hired to perform the following: well drilling, down hole camera evaluation, geophysical and in-situ permeability testing; well installation, abandonment and development; an aquifer performance test; and surveying of vertical and horizontal well locations. An Invitation for Bid (IFB) will be prepared by FPC and delivered to candidate subcontractors to perform all of these tasks. At this time, it is estimated that three separate IFBs will be prepared, One each for: 1) drilling and well retrofitting and installation, 2) well and pilot hole testing, and 3) surveying of the wells. FPC will take sole responsibility for reviewing and selecting all subcontractor(s).

AR300034

ORIGINAL (Red)

6.0 EXCEPTIONS TO THE ASSIGNMENT/ANTICIPATED PROBLEMS

The FIP is a guide and will be adhered to as best practical. However, it is anticipated that some alterations or amendments to the project scope and tasks may be necessary based on changing and unexpected field conditions or results. If field work is found to be excessively time consuming due to unanticipated constraints, the EPA WAM will be notified immediately and a mutual decision between EPA and FPC will be made to address the situation. If communication with the EPA WAM cannot be made within a reasonable time frame then the FPC Field Manager will take responsibility for the in-field change and document the incident within the field logbook and monthly report submitted to the EPA WAM.

Due to the nature and scope of field work proposed, unanticipated events (equipment breakdown, inclement weather) could delay field activity. If delays of this nature are encountered, the EPA WAM will be notified as soon as possible. In addition, time delays may result in unanticipated costs being incurred due to down time and/or additional equipment needs. If this occurs, the EPA WAM will be notified and the need for a revised cost estimate will be considered.

The proposed budget for subcontractor work is based on the performance of the maximum amount of anticipated field work (i.e. installing and testing all proposed wells). Therefore, once a subcontractor(s) is selected and their proposed budget confirmed, the EPA WAM may submit an amendment which reflects the actual subcontractor's budget.

No LOE or cost estimates have been included to address the offsite disposal of collected groundwater. At this time, all disposal of collected groundwater is anticipated to be performed onsite. If offsite disposal is required, the EPA WAM will be notified and a revised cost estimate considered.

AR300035

Finally, it is anticipated that all field work will be performed in level D protection. If higher levels of protective clothing and safety equipment are required, additional budget may be required.

AR300036

ORIGINAL (Red)

7.0 QUALITY ASSURANCE

FPC's work on this contract will be performed in accordance with the TES VII QA Project Plan, Revision 1, dated April, 1989. Activities described in this FIP may be the subject of a system audit conducted by the FPC QA Staff. Such an audit would check on the use of appropriate QC measures as defined in the TES VII QA Project Plan and work assignment - specific documents, and on adherence to the FIP deliverable requirements.

FPC's Regional QA staff has reviewed this FIP for QA requirements and will maintain QA oversight for the duration of the work assignment.

AR300037

ATTACHMENT A

FIELD AND EQUIPMENT NEEDS AND METHODOLOGY

ORIGINAL (Red)

Attachment A - Field and Equipment Needs and Methodology

Detailed descriptions of field and equipment needs, well drilling, installation and development methodology and geological and hydrogeological testing methodology are presented in this attachment.

A.1 GENERAL

The Project Manager will control all field log books. Each field log book will receive a serial number and be issued to the FPC field team members. Field log books will be maintained by the FPC field team to provide a daily record of significant events, observations, and measurements during the field investigation. Subcontractors performing the field work will also be responsible for documenting field activity. All entries will be signed and dated and made available to the EPA.

All information (except drilling logs, sampling records, and chain-of-custody forms) pertinent to field oversight and sampling activities will be recorded in the log books. The books will be bound with consecutively numbered pages. Entries in the log book will include, at a minimum, the following general information:

- Name and title of author, date and time of entry, and physical/environmental conditions during field activities,
- Purpose of field activity,
- Location of field activity,
- Name and address of field contact,

AR300039

ORIGINAL (Red)

- Name and title of field crew,
- Name and title of any site visitors,
- Field observations,
- Any field measurements,
- References for maps/photographs.

Entries in the log book will include, at a minimum, the following field sampling information:

- Sample media (e.g., soil, sediment, groundwater, etc.),
- Sample collection method,
- Number and volume of sample(s) taken,
- Description of sampling point(s),
- Volume of groundwater removed before sampling,
- Preservatives used,
- Date and time of collection,
- Sample identification number(s),
- Sample distribution (e.g., laboratory),
- Field observations,

AR300040

- Any field measurements made, such as pH, temperature, conductivity, water level, etc.,

- References for all maps and photographs of the sampling site(s),

- Information pertaining to sample documentation such as:
  - Bottle lot numbers,
  - Dates and methods of sample shipments,
  - Chain-of-Custody record numbers.

All original data recorded in Field Log Books, Sample Tags and Chain-of-Custody Records will be written with waterproof ink. None of these accountable serial documents will be destroyed.

If an error is made on an accountable document assigned to one individual, that individual will make all corrections simply by crossing a line through the error and dating and entering the correct information. The erroneous information will not be erased. Any subsequent error discovered on an accountable document will be corrected by the person who made the entry. All subsequent corrections will be initialed and dated.

A.2 MOBILIZATION AND DEMOBILIZATION OF SITE

Prior to any field activity, each FPC field team member will review the contents of the FIP as it pertains to the proposed tasks. The field team will meet in the FPC Wayne office to review the role of each member prior to travelling to the site. A mobilization meeting will be conducted by the Project Manager and the Site Health and Safety Officer for each site activity to review the technical scope, health and safety procedures at the site and quality assurance requirements with the field team prior to commencement of field efforts.

AR300041

Equipment will be mobilized from the Consultant's office as needed, including sampling equipment, monitoring instruments, personal protective equipment, decontamination equipment and other items. A field office trailer, sanitary facilities and utility hookups will be needed because of the duration of the proposed site activities.

The Project Manager will be responsible for mobilizing the field team and most of the field equipment. The Site Health and Safety Officer will be responsible for mobilizing air monitoring instruments, personal protective equipment and decontamination equipment. A FPC representative will be onsite at all times and serve as site Health and Safety Officer.

The subcontractors will be responsible for mobilizing and demobilizing the necessary drilling and testing equipment in addition to performing the work outlined in the bid specifications under the direction of the Project Manager and the Site Health and Safety Officer.

Equipment, materials and logistical items to be addressed and staged onsite prior to field activity include but are not limited to:

- Drilling and well installation permits,
- Water and power supply permits,
- Access agreements,
- Field office (temporary trailer),
- Portable phone,
- Four-wheel drive pick-up truck,

AR300042

ORIGINAL (Red)

- o Water supply ,
- o Sanitation facilities,
- o Generator (if no hook-up to local power supply available),
- o Secure storage area (drum and equipment),
- o Decontamination pad, material, and equipment,
- o Arrangements for disposal of waste generated onsite.

A.3 DECONTAMINATION

Sampling and field analytical equipment, the drill rig, and, to some extent, field personnel will all need to undergo decontamination in the field.

The following sequence of steps, in accordance with EPA Region III protocol, will take place to decontaminate small field sampling equipment:

- o Wash with a low-phosphate detergent.
- o Rinse with tap water,
- o Rinse with an ultra-pure dilute nitric acid solution. A ten percent acid solution is adequate. This step can be omitted if acid is intolerable to equipment,
- o Rinse with deionized water,
- o Rinse with methanol,
- o Rinse with deionized water,

AR300043

- Air dry equipment,

- Cover equipment with aluminum foil if it is not to be use immediately following decontamination.

Rinsing with dilute acid controls cross contamination of metals, while rinses with the organic solvents control cross contamination of organic substances. All rinsate will be disposed in an acceptable manner according to EPA and State regulations.

The drill rig and downhole well equipment will be steam-cleaned upon arrival onsite, after each boring is completed and prior to each trip offsite. The decontaminated equipment will be stored in a separate area. Steam cleaning will take place at a designated staging area to be determined in the field. A decontamination pad will be constructed with an impermeable liner and, if necessary, equipped with a sump to facilitate containment requirements. In addition, all well construction materials, including riser, screens, etc., will be steam-cleaned prior to installation. Decontamination of field personnel will also take place as specified in the site Health and Safety Plan.

A.4 MONITORING WELL INSPECTION AND TESTING

A.4.1 DOWNHOLE CAMERA INSPECTION

The downhole camera is a color video camera equipped with a wide-angle lens that allows a 360 degree view of the borehole. The downhole camera will be used for the identification and location of fractures and other geological features.

AR300044

Fractures can often be viewed as physical openings in the borehole wall. The camera can be stopped at any depth for a detailed study of the borehole wall. The depth of the camera within the borehole is shown on the monitor at all times, allowing direct determination of fracture depth. Additionally, a compass may be placed near the camera lens to allow for the determination of the strike of the fractures or other structures of interest.

To perform a downhole camera inspection, a specially designed television camera will be lowered down the well opening with a steel cable. The camera and cable are controlled by an operator located in a specially equipped van stationed as near the well as possible (stationing the van near the well overcomes potential cable length limitations). As the camera is lowered, a television monitor located inside the van displays the picture and its recorded depth. During the execution of the survey, the focus, iris and light intensity of the camera may be adjusted to enhance viewing. The camera can be adjusted and held at any recorded depth for an extended analysis. A videotape of the borehole wall and a field log of observations during this program will be generated for the EPA permanent record. The camera and cable will be decontaminated via steam cleaning following its use within each well.

A.4.2 BOREHOLE GEOPHYSICS

As outlined in Tasks 4, 5 and 7, geophysical surveys are proposed for the existing and proposed wells. The logging methods proposed for use include: natural gamma logging, cement bond logging, caliper logging, and single-point resistivity measurements. The following paragraphs outline the information and data typically registered by each testing device.

Natural gamma logging involves the measurement of naturally occurring gamma ray activity coming from natural isotopes in the materials within the borehole. This tool can work in either cased or uncased, dry or wet wells.

AR300045

ORIGINAL (Red)

The results of this test can be used to identify the overburden and bedrock stratigraphy. Natural gamma radiation is lowest in basic igneous rock, intermediate in metamorphic, and highest in some sedimentary rocks (i.e. shale). A sonde containing a detector (usually a scintillometer), amplifier, and counting circuits is lowered down the borehole on a cable. The sonde detects the irregularly emitted gamma rays and averages the reading over a specific period of time. Although the borehole diameter can influence the data (signal decreases as hole widens), a caliper log will be used in conjunction with the gamma ray log to counter this problem.

Cement Bond logging measures the structural integrity of the cement lying between the PVC casing and the well borehole and will be conducted on existing wells. The test is performed with an acoustical sonde. Reflected sound waves are detected and registered by the sonde, and the results provide insight into where possible cracks or fissures within the cement wall may be located.

Caliper logging provides a continuous record of the borehole diameter using a mechanical probe with a number of adjustable arms extending from the probe. As the probe is raised through the borehole, the arms contact the borehole walls. The angle of projection changes as the diameter of the borehole increases or decreases, and is recorded as a curve calibrated to show diameter of the borehole versus depth. As the borehole diameter increases, the logging curve deflects to the right. A decrease in the borehole size causes a deflection to the left. Fractures often appear as abrupt right-ward deflections of the logging curve and therefore can also be identified on the log. Consolidation zones often exhibit a smooth straight line recording on the caliper log.

AR300046

The single-point resistivity tool consists of two electrodes separated by a voltmeter and ammeter connected in series. A current source is connected in parallel with the voltmeter. One electrode is placed on the surface while the other electrode is run down the borehole. The resistivity measures the ability of the formation to oppose the flow of electricity. The resistivity of the rock formation is directly related to the degree of inter-connection between pore or fracture channels filled with formation water. The formation water is an electrolytic solution and therefore a conductive medium. The degree of conductivity is based on the total dissolved solids concentration of the solution, the higher the concentration the higher the conductivity. Fracture zones often appear as a zone of low resistance when viewed on the resistivity log strip chart.

The results obtained from these tests will be used to identify each well's lithology, fracture zones, and potential zones of transmissivity.

A.4.3 PACKER TESTS AND WATER QUALITY SCREENING

Discrete zone permeability testing and water quality screening will be performed within the selected existing boreholes and the six proposed pilot wells. The purpose of these tests is to help further identify zones of high hydraulic conductivity and water quality. The number and depth of intervals for this testing will be determined based on the results from the downhole camera and geophysical surveys.

AR300047

Dual packers will be utilized to isolate the chosen zones from the remainder of the borehole. The length of the zones tested will be determined by the previous testing and evaluation. Prior to submerging the packer equipment, the static water level is measured. The apparatus is then tested to withstand a differential pressure of 100 psi for five minutes without leaking within either the wells casing or, alternatively, a dry consolidated section of the well.

The apparatus will then be submerged starting with the deepest part of the well to be tested. A submersible pump is located between the packers, and a hollow pipe (drop pipe) is attached to the pump and extended to the land surface. The following is then performed:

1. Transducers are activated and initial millivolt readings are obtained. The readings are allowed to stabilize.

2. Millivolt readings from each transducer are calibrated to read depth to water level relative to the measuring point.

3. Nitrogen is introduced through the inflation tubes to each packer causing the packers to expand outward and seal the hole.

4. Once the packers are inflated, the transducer readings (which reflect the head differential between the isolated intervals) are noted. Any similar readings between the transducers would suggest an incomplete seal and would require adjustment to the packer interval.

5. A slug test is conducted by introducing one gallon of distilled water into the isolated interval and noting the transducer response.

AR300048

6. The drop in water level is recorded with the data logger for a period of ten minutes or until the water level has reached 90% of the static water level.

A sample will be removed and analyzed for TAL and TCL from each zone that is slug-tested; the following steps will be performed:

a. The pump is activated and the flow rate is monitored using a totalizing flow meter. Continuous water level response above, between and below the isolated interval is noted for the duration of pumping.

b. Three to five packer zone volumes are evacuated from the well and water quality samples are then obtained from the interval.

c. Once the samples are collected, the pump is shut-off and water level recovery readings can be recorded.

d. The samples will be preserved, packaged and shipped in accordance with the sample handling procedures outlined in the QAPjP.

A.5 SUBSURFACE SOIL COLLECTION

Limited subsurface soil sampling will be performed at either wells EPA-4 or EPA-5. Two samples of the saturated and unsaturated overburden saprolite will be collected at a well location using a split spoon collection device. The location of each sample will be approximately ten feet above and below the water table within each well. An auger drill will be used to access the saprolite collection horizons. Existing information indicates that saturation occurs approximately 50 feet below ground surface at EPA-4 and 40 feet below ground surface at EPA-5. Therefore, auger drilling will be conducted to approximately 40 feet below ground surface at EPA-4 and a split-spoon sample collected. Drilling will then advance to approximately 60 feet below ground surface and a second split-spoon will be acquired.

A similar procedure will be employed at EPA-5. The collected sample will be visually inspected by the supervising geologist who will record the

sample description (i.e. color, lithology and grain size, amount of recovery and other pertinent features). Each split-spoon sample will be screened with an hNu meter to detect the possible presence of volatile organics within the soil, and a sample for headspace and analysis collected if volume permits.

All soil samples will be sent to a laboratory for full TAL/TCL analyses as well as determinization of physical and chemical characteristics including pH, total organic carbon, cation exchange capacity, density, moisture content and permeability. Soil for VOA analysis will be collected first and placed directly from the split-spoon into sample containers using stainless steel implements. The remaining soil in the split-spoon will be homogenized in a stainless steel bowl (after removal of rocks and other debris) and placed in the appropriate sample containers. Bottle requirements are listed in the QAPjP. Sample labels on all bottles and appropriate documents will be completed with the information as specified in the QAPjP.

All split-spoon sampling will be conducted in accordance with ASTM Specification D-1586-84 for standard penetration test and split barrel sampling. In addition, the split spoon sampler will be decontaminated between sample locations according to the procedure outlined in section A.3.

AR300050

A.6 DRILLING AND MONITORING WELL INSTALLATION AND DEVELOPMENT

A.6.1 Drilling Methodology

This project may require the drilling of up to 18 bedrock wells at six separate locations surrounding the site. Prior to the initiation of drilling, utility maps will be checked to avoid drilling through underground utilities.

All boreholes will be drilled with either an air rotary or air hammer drill rig. The borehole and casing diameters are proposed as follows: The six boreholes drilled for pilot wells EPA-1 through EPA-6 will be twelve inches in diameter through the unconsolidated overburden and extend three to five feet into competent bedrock. Drilling will be halted at this point and an eight and three-quarter inch diameter galvanized steel casing will be inserted into the borehole. The casing will then be seated into the bedrock by pressure grouting a cement/bentonite slurry into the two inch annulus to a depth of approximately three feet below the ground surface. A cap and lock will be affixed to the casing and the seal will then be allowed to cure for twenty-four hours.

Following the setting of the steel casing (greater than or equal to twenty-four hours), the boring will be advanced with an eight inch drill bit by lowering the drilling tools through the steel casing. The eight inch boring will be advanced to the borehole's final required depth.

Pilot boreholes will be drilled to a depth of 80 feet below the encountered water line, or to a depth of 200 feet, to allow for a sufficient water column to undergo borehole geophysical analysis. Based on the site's historical well logs, if water is not observed before 120 feet, it is anticipated that a 200 feet deep well would

AR300051

contain enough of a water column to determine the hydrogeologic characteristics of the aquifer at that well location. Additional wells placed next to the pilot holes will be drilled directly to a water bearing zone or fracture as defined through the pilot hole testing.

It should be noted that once the pilot hole drilling is complete, the borehole will be developed with the drill rig until the water removed from the well displays a non-turbid appearance. This will facilitate the downhole camera evaluation.

A.6.2 Monitoring Well Specifications

This section discusses the well construction materials and methodology including well screen, riser pipe, well protector, gravel pack, grout mix and water. All materials used in construction will be free of chemicals, paint, coatings, etc.,that could leach into the groundwater. All materials and methodologies will be in accordance with ASTM standards.

Figures 3, 5 and 6 shows typical construction specifications for the existing, proposed bedrock, and proposed saprolite monitoring wells. Deep, intermediate, and shallow bedrock monitoring wells in each cluster will be installed according to the following specifications:

- Schedule 40 PVC 4-inch threaded, flush-joint risers and screens will be installed in each borehole.

- Screens will be up to 10 feet long and slot openings will be 0.010 inch in size.

- Approximate depth of the pilot holes is estimated to be between 150 feet to 200 feet below ground surface. The depth of the intermediate and shallow wells will be determined upon review of field data.

AR300052

- The top of the well riser pipe will extend two feet above the ground surface.

- The annulus around the screens will be back-filled with an appropriate size of silica sand such as Morie #1 sand to a minimum height of two feet above the top of the screen.

- A bentonite pellet seal will be placed above the sand pack. The seal will be a minimum thickness of two feet. The seal will be allowed to hydrate for 1 hour before placement of grout above the seal.

- The remainder of the annular space will be filled with a cement/bentonite grout to ground surface. The grout will be pumped through a tremie pipe so that the seal is smooth and even. The grout will be mixed in the following proportions: 6.5 gallons of water to a 94-pound bag of Portland Type I or Type III cement to 3 pounds of pure granular bentonite. The grout will be allowed to set for a minimum of 24 hours before wells are developed.

- All well screens and riser pipes in the proposed well cluster (EPA-1 through 6) will be four inches in diameter. In addition, a two inch annulus space will be maintained throughout the entire length of the well.

- For the retrofitting of the existing wells: a four inch screen and riser pipe will be installed within the six-inch wells (resulting in a one-inch annulus between the borehole wall and well pipe); and, a two inch well will be installed within the four inch borehole at DER-1. It should be noted that the need to retrofit any existing well will be based on the well's

AR300053

structural integrity and the number of transmissive zones located during the testing. If only a single transmissive zone is identified, the well may remain unscreened.

- An eight inch galvanized steel casing will be installed in each pilot hole and additional well and will extend from two feet above the ground surface to three to five feet below the bedrock surface.

- A two-foot by two-foot cement seal or pad will be constructed around each well, sloped to channel water away from the well, and deep enough to remain stable during freezing and thawing conditions.

- A weep hole will be drilled into the base of the protective casing to allow any water trapped between the inner and outer casing to drain.

- Following the installation of all wells, the top of the PVC well casing and outer protective casing will be marked and surveyed to 0.01 foot, and elevations will be determined relative to a fixed benchmark or datum. Pertinent information on well identification will be permanently marked on the well.

A.6.3 Monitoring Well Development

Monitoring wells will be developed by the overpumping method.

The monitoring wells will be developed with a submersible pump or bladder pump using the overpumping method. A submersible pump will be lowered to the lowest point of the well and turned on. After one well volume is removed or the well runs dry, the pump intake will be

AR300054

relocated to a position immediately above the well screen. Pumping will commence (after recharge if dry) at the maximum rate possible so as to reach an equilibrium with the purge rate and recharge rate.

The well will be purged until the water is reasonably free of visible sediment and pH, temperature, and conductivity stabilize. Following development, wells will be allowed to recover for at least 48 hours before groundwater is purged and sampled. Development water will be contained and disposed of in accordance with state and federal requirements.

A.7 WELL ABANDONMENT

Existing monitoring wells will be abandoned, if necessary, by the following procedures.

1. Existing monitoring wells should be inspected using the downhole camera equipment to determine the casing integrity and locate possible obstructions to grouting.

2. If removal of casing is not possible because of the condition of the casing or due to previous grouting, a casing ripper will be employed to perforate the entire length of casing. For monitoring wells, the upper portion of the casing seated within the outer protective casing should be removed prior to grouting. This can be done with a casing cutter to separate the upper portion of the casing at the desired length. If possible, the outer casing will also be removed to insure a proper water-tight seal in the upper 15 to 20 feet. If the existing seal appears to be secure, the outer casing may be left intact; however, due to the low pH of groundwater, significant corrosion may have occurred.

AR300055

3. Groundwater quality and flow conditions encountered during the investigation will determine the appropriate grouting technique, need for mechanical seals such a packers, and the proper grout components and proportions for site conditions. Grout will be introduced from the bottom of the well.

   Seals placed within the casings and will be injected under a pressure calculated to be at least 50 psi greater than the normal hydrostatic pressure within the well at the point of injection.

A.8 GROUNDWATER SAMPLING

The following is a general list of equipment necessary for the sample collection activities in addition to the geophysical instruments, downhole camera, packer test equipment, and drilling tools and rig.

- Appropriate pre-cleaned, traceable sample containers,
- Reagent-grade preservatives (HNO_3, and HCL pipettes) and narrow-range pH paper,
- Filtration equipment and 0.45 micron filter paper for groundwater samples. Components of filtration equipment in contact with sample will be borosilicate glass or polyethylene,
- Generator,
- Chain-of-Custody forms, sample labels, sample tags, custody seals, and other required record forms,
- Two log books and two indelible ink markers,

AR300056

ORIGINAL (Red)

- Phosphate-free decontamination soaps (Alconox), reagent-grade methanol, and deionized water, to be used for decontaminating equipment between sampling stations,

- Two buckets, two plastic wash basins, and six scrub brushes to be used in the decontaminating equipment,

- Aluminum foil to wrap sampling equipment following decontamination,

- Camera and film for use in documenting sampling procedures and sample locations,

- Shipping labels,

- Knife,

- Coolers for sample shipment

- Vermiculite for packing/shipping samples,

- Strapping tape (8 rolls),

- Clear plastic tape (2 rolls),

- One roll of Duct tape,

- Plastic sheeting

- Ziploc plastic bags (4 boxes),

- Portable field instruments, including an photoionization detector, pH meter, conductivity meter, thermometer, and electric water level indicator.

AR300057

The following is a step-by-step sampling procedure to be used to collect groundwater samples from the existing and new bedrock monitoring wells.

- Place plastic sheeting around well

- Remove well cap and measure volatiles in the well with an hNu

- Measure the distance to the static water level from the surveyed well elevation mark on the top of the casing with the electric probe. Record the measurement to the nearest 0.01 foot. Depth to bottom of the well should also be measured.

- Decontaminate the probe by rinsing with deionized water and, if necessary, Alconox.

- Purge the well by removing a minimum of three to five well volumes of water. Purging will be conducted with a low-speed pump such as a submersible pump. If the well goes dry before the required volumes are removed, the well may be sampled when it recovers sufficiently.

- Collect samples with a clean Teflon or stainless steel bailer, lowered by a dedicated polypropylene line. Measure temperature, pH, conductivity and note these in the logbook.

- Fill pre-preserved sample containers for volatile organic compounds first. Sample containers for semi-volatile organic compounds, TAL metals (filtered and unfiltered), and other analytes are then filled.

- After samples are collected, decontaminate bailer and dispose of polypropylene line.

AR300058

- Filtered and unfiltered samples will be collected for TAL metals,and the pH of the sample will be adjusted with nitric acid to less than 2. The pH will be tested by pouring a small quantity of the sample into a separate container and measuring with litmus paper.

AR300059